ISO15552 Cylinders

ø32, ø40, ø50, ø63, ø80, ø100, ø125

- CNOMO and circular grooves are on all four sides.
- Switch can be slid in.
- Reduced weight due to a change in the configuration of the cover
- Small sized D-M9□ auto switch mountable

Profile Design ISO Cylinder

Series CP96

New **Non-rotating Rod Type Added !**

CP95/**CP96** Weight Comparison

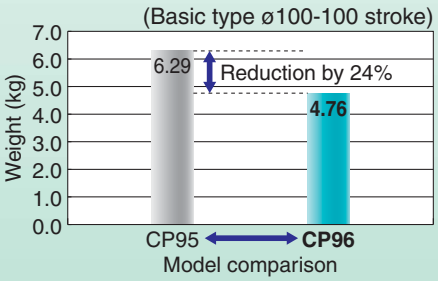

ISO Cylinder

Series C96

New **Non-rotating Rod Type, Smooth Cylinder Added !**

C95/**C96** Weight Comparison

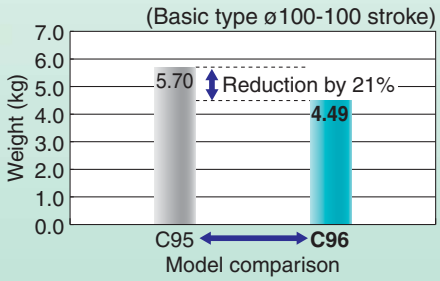

Series Variations

Series	Action	Type		Basic	Built-in magnet	Rod boot	Bore (mm)
Series CP96 Standard	Double acting	Single rod	Non-lube	●	●	●	32, 40, 50, 63 80, 100, 125
		Double rod	Non-lube	●	●	●	
Series CP96K New Standard/ Non-rotating rod	Double acting	Single rod	Non-lube	○	○	○	32, 40, 50, 63 80, 100
		Double rod	Non-lube	○	○	○	
Series C96 Standard	Double acting	Single rod	Non-lube	●	●	●	32, 40, 50, 63 80, 100, 125
		Double rod	Non-lube	●	●	●	
Series C96K New Standard/ Non-rotating rod	Double acting	Single rod	Non-lube	○	○	○	32, 40, 50, 63 80, 100
		Double rod	Non-lube	○	○	○	
Series C96Y New Smooth cylinder	Double acting	Single rod	Non-lube	●	●		32, 40, 50, 63 80, 100, 125

Series CP96/C96

SMC

CAT.EUS20-204B-UK

Profile Design ISO Cylinder

Series CP96

ø32, ø40, ø50, ø63, ø80, ø100, ø125

Compliance to ISO 15552
Profile design with enclosed tie-rods

New **Series Expanded**

- **Non-rotating rod type (Single rod/Double rod) added !**
- **9 Made to Order types added !**

Variations

Series	Action	Type		Basic	Built-in magnet	Rod boot	Bore (mm)
Standard *Series CP96*	Double acting	Single rod	Non-lube	●	●	●	32, 40, 50, 63 80, 100, 125
		Double rod	Non-lube	●	●	●	
Standard/Non-rotating rod *Series CP96K*	Double acting	Single rod	Non-lube	●	●	●	32, 40, 50, 63 80, 100
		Double rod	Non-lube	●	●	●	

Series CP96

Improved end of stroke cushion capacity

Piston rod lurching has been eliminated at the end of stroke positions by means of a floating seal mechanism.

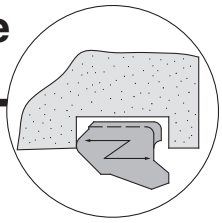

Air cylinder Compact and light design

Reduced weight due to a change in the configuration of the cover.

New Non-rotating rod type added !

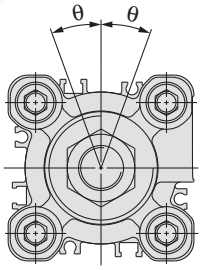

Non-rotating accuracy (mm)

Bore size	θ
ø32 to ø63	±0.5°
ø80, ø100	±0.3°

New Standard type with rod boot specifications.

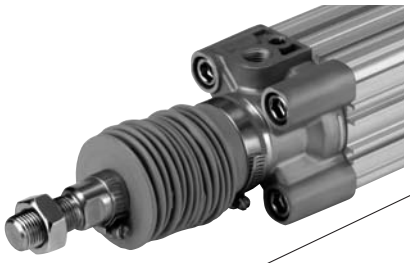

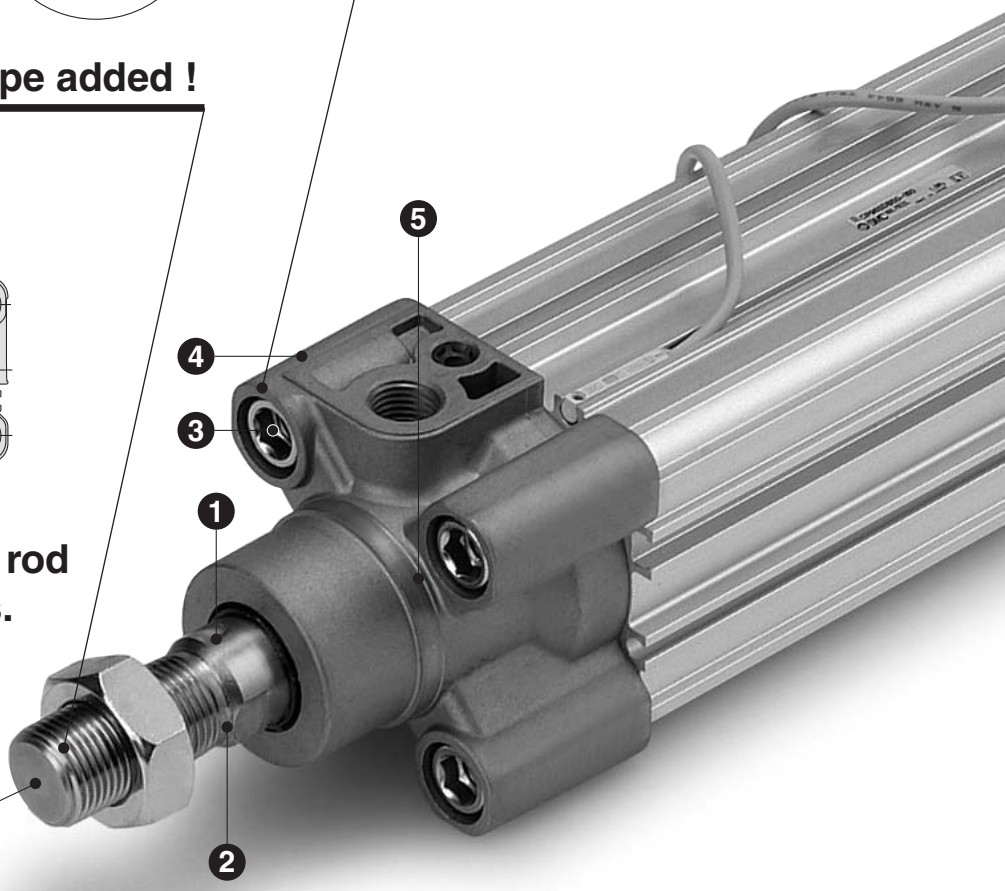

Improved mounting accuracy

High accuracy covers and tie rod nuts simplify the mounting process and also extend cylinder life.

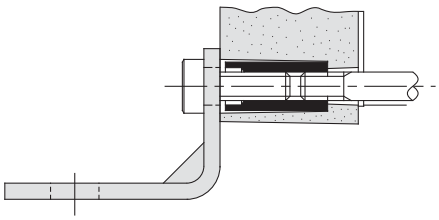

Piston rod deflection reduced

Deflection of the piston rod has been reduced by increasing the precision of the bushing and piston rod, and reducing the tolerances.

[Differences between the CP96 and the CP95 series]

❶ ø25 mm piston rod diameter for ø100
Conforming to German automobile association standard (VDA)

❷ Rod end nut can be screwed up to TRP.

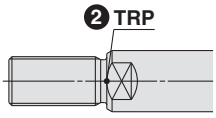

❸ Tie-rod nuts changed to conform to the ISO 15552 standard (ø80 to ø125)

❹ Surface treatment painting is now avoided due to environmental concerns. Coating trivalent chromate only.

❺ Uses an iron-based sintered material for the bushing (ø32 to ø100)

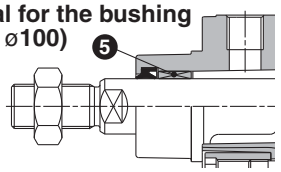

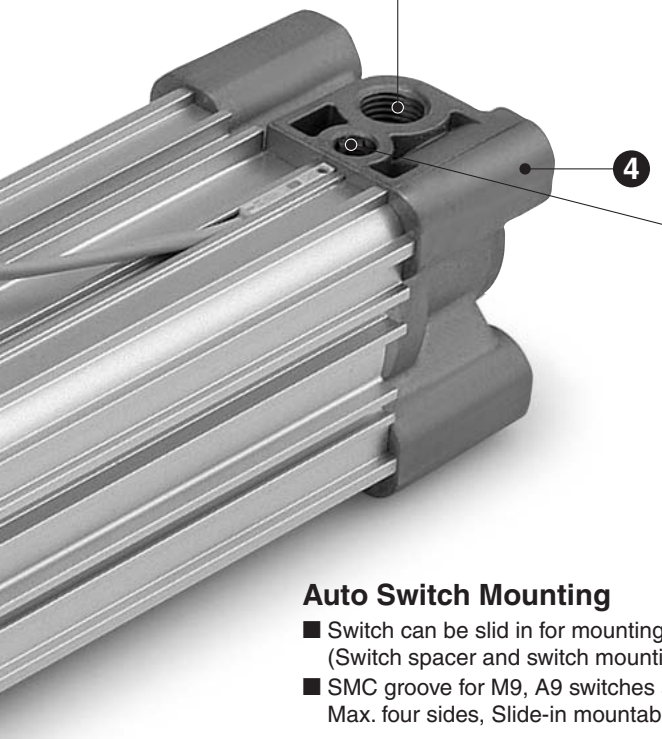

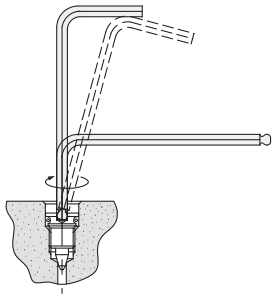

Simple end of stroke cushion valve adjustment

Since the adjustment of the cushion valve is performed with a hex wrench key, even finite control can be easily accomplished.
Furthermore, the cushion valve has been recessed so that it does not protrude from the cover.

Auto Switch Mounting

- Switch can be slid in for mounting.
  (Switch spacer and switch mounting bracket are required for the CP95.)
- SMC groove for M9, A9 switches and CNOMO groove are on all four sides.
  Max. four sides, Slide-in mountable

Switch mounting surface

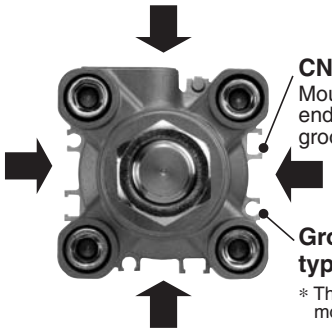

CNOMO grooves
Mount a switch from the head end for attaching to the CNOMO groove on the port surfaces.

Groove for the D-M9□, A9□ type*

* The D-M9□V, A9□V series are not mountable.

Switch can be slid in.

Mountable from both the head end and the rod end.

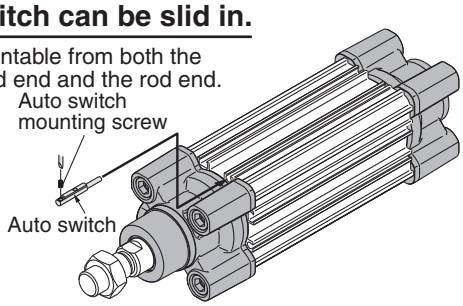

New Made to Order added !

Improvement in applications by made to order specifications.

Symbol	Specifications	Standard type		Non-rotating rod type	
		Single rod	Double rod	Single rod	Double rod
-XA□	Change of rod end shape	○	○	—	—
-XB6	Heat resistant cylinder (–10 to 150°C)	○	○	—	—
-XC4	With heavy duty scraper	○	○	—	—
-XC7	Tie-rod, cushion valve, tie-rod nut, etc. made of stainless steel	○	○	—	—
-XC10	Dual stroke cylinder/Double rod type	○	—	—	—
-XC11	Dual stroke cylinder/Single rod type	○	—	—	—
-XC22	Fluororubber seals	○	○	—	—
-XC35	With coil scraper	○	○	—	—
-XC68	Made of stainless steel (With hard chrome plated piston rod)	○	○	—	—

ISO Cylinder: Standard
Double Acting, Single/Double Rod
Series CP96
ø32, ø40, ø50, ø63, ø80, ø100, ø125

How to Order

With auto switch **CP96SD B 32 – 100 J W – M9BW S –**

Built-in magnet

Mounting

B	Basic/Without bracket
L	Axial foot
F	Rod end flange
G	Head end flange
C	Single rear clevis
D	Double rear clevis

Bore size

32	32 mm
40	40 mm
50	50 mm
63	63 mm
80	80 mm
100	100 mm
125	125 mm

Stroke (mm)
(Refer to "Standard Stroke" on page 6.)

Rod boot

—	Without boot
J	Nylon tarpaulin (one end)
JJ	Nylon tarpaulin (both ends)
K	Heat resistant tarpaulin (one end)
KK	Heat resistant tarpaulin (both ends)

Rod

—	Single rod
W	Double rod

Auto switch

—	Without auto switch

∗ For applicable auto switch model, refer to the below table.

Number of auto switches

—	2 pcs.
S	1 pc.
3	3 pcs.
n	"n" pcs.

Made to Order
Refer to the page 6 for details.

Applicable Auto Switches

Type	Special function	Electrical entry	Indicator light	Wiring (Output)	Load voltage DC		Load voltage AC	Auto switch model	Lead wire length (m) 0.5 —	1 (M)	3 (L)	5 (Z)	Pre-wired connector	Applicable load	
Solid state switch	—	Grommet	Yes	3-wire (NPN)	24 V	5 V, 12 V	—	**M9N**	●	●	●	○	○	IC	Relay, PLC
				3-wire (PNP)				**M9P**	●	●	●	○	○		
				2-wire		12 V		**M9B**	●	●	●	○	○	—	
	Diagnosis indication (2-colour)	Grommet		3-wire (NPN)		5 V, 12 V		**M9NW**	●	●	●	○	○	IC	
				3-wire (PNP)				**M9PW**	●	●	●	○	○		
				2-wire		12 V		**M9BW**	●	●	●	○	○	—	
	Water resistant (2-colour)			3-wire (NPN)		5 V, 12 V		**M9NA**∗∗	○	○	●	○	○	IC	
				3-wire (PNP)				**M9PA**∗∗	○	○	●	○	○		
				2-wire		12 V		**M9BA**∗∗	○	○	●	○	○	—	
Reed switch	—	Grommet	Yes	3-wire (Equiv. to NPN)	—	5 V	—	**A96**	●	—	●	—	—	IC	—
			None	2-wire	24 V	12 V	100 V	**A93**	●	—	●	—	—	—	Relay, PLC
							100 V or less	**A90**	●	—	●	—	—	IC	

∗ Lead wire length symbols: 0.5 m ····· — (Example) M9NW
1 m ····· M (Example) M9NWM
3 m ····· L (Example) M9NWL
5 m ····· Z (Example) M9NWZ

∗ Solid state switches marked with "○" are produced upon receipt of order.

∗ Since there are other applicable auto switches than listed, refer to the auto switch guide.
∗ For details about auto switches with pre-wired connector, refer to the auto switch guide.
∗ D-A9□, M9□, M9□W, M9□AL are shipped together, (but not assembled).
(Switch mounting bracket is only assembled at the time of shipment.)
∗∗ Water resistant type auto switches can be mounted on the above models, but in such case SMC cannot guarantee water resistance. Consult with SMC regarding water resistant types with the above model numbers.
Note) D-Y59A, Y69A, Y7P, Y7□W, Z7□, Z80 type cannot be mounted on the CP96 series.
Moreover, D-M9□□ and A9□ type cannot be mounted on square groove of the CP96 series.

Accessories

Cylinder Mounting Accessories

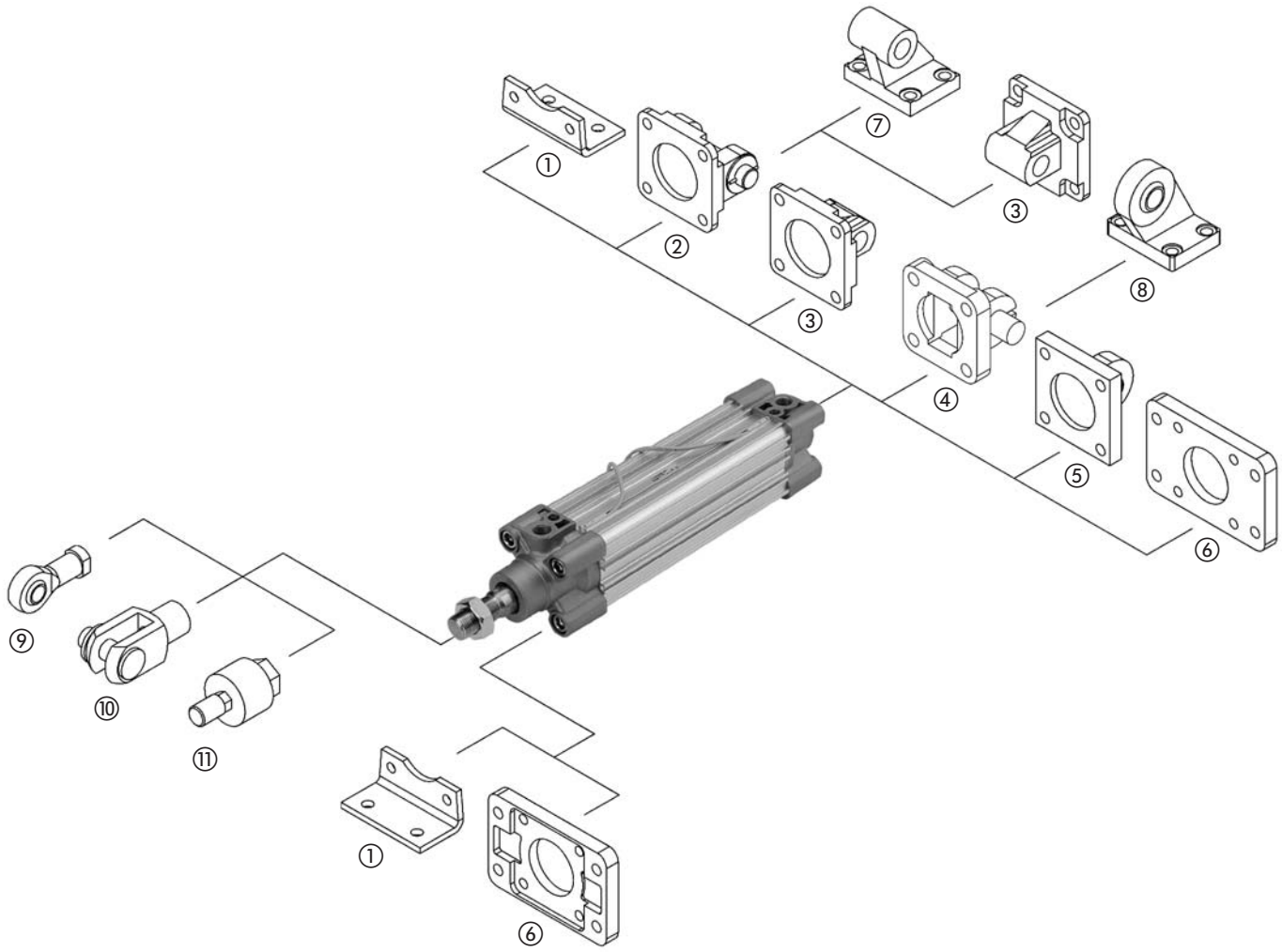

Bore size (mm)	① Foot (Supplied with two pieces and 4 screws)	② Female head end clevis (Corresponds to E accessory) (Supplied with bolt, safety device and 4 screws)	③ Male head end clevis (Supplied with 4 screws)	④ Female head end clevis (for ES accessory) (Supplied with bolt, safety device and 4 screws)	⑤ Male head end clevis with ball joint (Supplied with 4 screws)	⑥ Rod/Head end flange (Supplied with 4 screws)	⑦ Angled head end clevis	⑧ Angled head end clevis with ball joint	⑨ Piston rod ball joint (ISO 8139)	⑩ Rod clevis (ISO 8140) (Supplied with bolt and safety device)	⑪ Floating joint
32	L5032	D5032	C5032	DS5032	CS5032	F5032	E5032	ES5032	KJ10D	GKM10-20	JA30-10-125
40	L5040	D5040	C5040	DS5040	CS5040	F5040	E5040	ES5040	KJ12D	GKM12-24	JA40-12-125
50	L5050	D5050	C5050	DS5050	CS5050	F5050	E5050	ES5050	KJ16D	GKM16-32	JA50-16-150
63	L5063	D5063	C5063	DS5063	CS5063	F5063	E5063	ES5063	KJ16D	GKM16-32	JA50-16-150
80	L5080	D5080	C5080	DS5080	CS5080	F5080	E5080	ES5080	KJ20D	GKM20-40	JAH50-20-150
100	L5100	D5100	C5100	DS5100	CS5100	F5100	E5100	ES5100	KJ20D	GKM20-40	JAH50-20-150
125	L5125	D5125	C5125	DS5125	CS5125	F5125	E5125	ES5125	KJ27D	GKM30-54	JA125-27-200

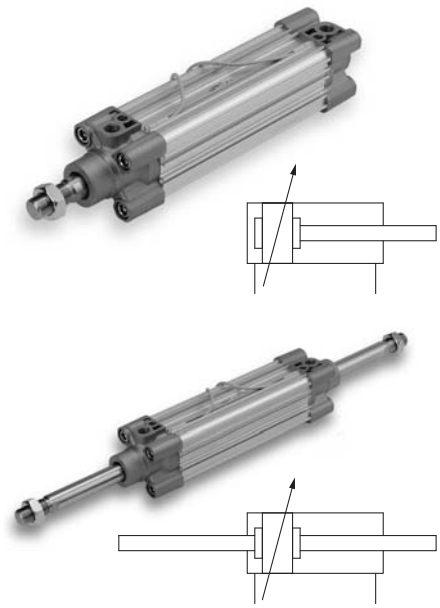

Specifications

Bore size (mm)	32	40	50	63	80	100	125
Action	Double acting						
Fluid	Air						
Proof pressure	1.5 MPa						
Max. operating pressure	1.0 MPa						
Min. operating pressure	0.05 MPa						
Ambient and fluid temperature	Without auto switch: –20 to 70°C∗ With auto switch: –10 to 60°C∗						
Lubrication	Not required (Non-lube)						
Operating piston speed	50 to 1000 mm/s						50 to 700 mm/s
Allowable stroke tolerance	Up to 250 st: $^{+1.0}_{0}$, 251 to 1000 st: $^{+1.4}_{0}$, 1001 to 1500 st: $^{+1.8}_{0}$, 1501 to 2000 st: $^{+2.2}_{0}$						
Cushion	Both ends (Air cushion)						
Port size	G 1/8	G 1/4	G 1/4	G 3/8	G 3/8	G 1/2	G 1/2
Mounting	Basic, Axial foot, Rod end flange, Head end flange, Single clevis, Double clevis, Centre trunnion						

∗ No freezing

Standard Stroke

Bore size (mm)	Standard stroke (mm)	Max. stroke∗	
		Single rod	Double rod
32	25, 50, 80, 100, 125, 160, 200, 250, 320, 400, 500	2000	1000
40	25, 50, 80, 100, 125, 160, 200, 250, 320, 400, 500	2000	
50	25, 50, 80, 100, 125, 160, 200, 250, 320, 400, 500, 600	2000	
63	25, 50, 80, 100, 125, 160, 200, 250, 320, 400, 500, 600	2000	
80	25, 50, 80, 100, 125, 160, 200, 250, 320, 400, 500, 600, 700, 800	2000	
100	25, 50, 80, 100, 125, 160, 200, 250, 320, 400, 500, 600, 700, 800	2000	
125	—	2000	

Intermediate strokes are available.
∗ Please consult with SMC for longer strokes.
∗ ø125 and Double rod are produced upon receipt of order.

Minimum Stroke for Auto Switch Mounting

Refer to page 19 for “Minimum Stroke for Auto Switch Mounting”.

Made to Order Specifications

(For details, refer to pages 57 to 64.)

Symbol	Specifications
-XA□	Change of rod end shape
-XB6	Heat resistant cylinder (150°C)
-XC4	With heavy duty scraper
-XC7	Tie rod, cushion valve, tie rod nut, etc. made of stainless steel
-XC10	Dual stroke cylinder/Double rod
-XC11	Dual stroke cylinder/Single rod
-XC22	Fluororubber seals
-XC35	With coil scraper
-XC68	Made of stainless steel. (With hard chronium plated piston rod)

Accessories

Mounting		Basic	Foot	Rod end flange	Head end flange	Single clevis	Double clevis	Centre trunnion
Standard	Rod end nut	●	●	●	●	●	●	—
	Clevis pin	—	—	—	—	—	●	—
Option	Piston rod ball joint	●	●	●	●	●	●	—
	Rod clevis	●	●	●	●	●	●	—
	Rod boot	●	●	●	●	●	●	—

∗ Please do not use a piston rod ball joint (or floating joint) together with a head end clevis with a ball joint (or angled head end clevis with a ball joint).

X option combinations available to order

Symbol	-XA□	-XB6 Note 1)	-XC7	-XC22
-XA□				
-XB6 Note 1)	●			
-XC7	●	●		
-XC22	●	—	●	
-XC68	●	●	●	●

●: Combination possible to produce.
—: Combination not produced.
Note 1) Only for without magnet type.
If you want to order a combination of non Simple Special options, just add the X options by alphabetical order at the end of the part number, for example: XC7C22.

Theoretical Output

OUT IN

(N)

Bore size (mm)	Rod diameter (mm)	Operating direction	Piston area (mm^2)	Operating pressure (MPa)								
				0.2	0.3	0.4	0.5	0.6	0.7	0.8	0.9	1.0
32	12	OUT	804	161	241	322	402	482	563	643	724	804
		IN	691	138	207	276	346	415	484	553	622	691
40	16	OUT	1257	251	377	503	629	754	880	1006	1131	1257
		IN	1056	211	317	422	528	634	739	845	950	1056
50	20	OUT	1963	393	589	785	982	1178	1374	1570	1767	1963
		IN	1649	330	495	660	825	989	1154	1319	1484	1649
63	20	OUT	3117	623	935	1247	1559	1870	2182	2494	2805	3117
		IN	2803	561	841	1121	1402	1682	1962	2242	2523	2803
80	25	OUT	5027	1005	1508	2011	2514	3016	3519	4022	4524	5027
		IN	4536	907	1361	1814	2268	2722	3175	3629	4082	4536
100	25	OUT	7854	1571	2356	3142	3927	4712	5498	6283	7068	7854
		IN	7363	1473	2209	2945	3682	4418	5154	5890	6627	7363
125	32	OUT	12272	2454	3682	4909	6136	7363	8590	9817	11045	12272
		IN	11468	2294	3440	4587	5734	6881	8027	9174	10321	11468

Note) Theoretical out put (N) = Pressure (MPa) x Piston area (mm^2)

Weight (Single rod)

(kg)

Bore size (mm)		**32**	**40**	**50**	**63**	**80**	**100**	**125**
Basic Weight	Basic	0.55	0.84	1.36	1.77	2.84	3.77	6.82
	Foot	0.16	0.20	0.38	0.46	0.89	1.09	2.60
	Flange	0.20	0.23	0.47	0.58	1.30	1.81	4.10
	Single clevis	0.16	0.23	0.37	0.60	1.07	1.73	4.15
	Double clevis	0.20	0.32	0.45	0.71	1.28	2.11	4.25
	Trunnion	0.71	1.10	1.73	2.48	4.25	5.95	2.98
Additional Weight per each 50 mm stroke	All mounting brackets	0.14	0.18	0.30	0.32	0.49	0.54	0.84
Accessory	Single rod clevis	0.07	0.11	0.22		0.40		1.20
	Double rod clevis	0.09	0.15	0.34		0.69		1.84

Calculation: (Example) CP96SD40-100
- Basic Weight ····· 0.84 (kg) (Basic, ø40)
- Additional Weight ···· 0.18 (kg/50 st)
- Cylinder stroke ····· 100 (st)
  0.84 + 0.18 x 100 50 + 0.32 = 1.52 kg
- Mounting ····· 0.32 (kg) (Double clevis)

Allowable Kinetic Energy

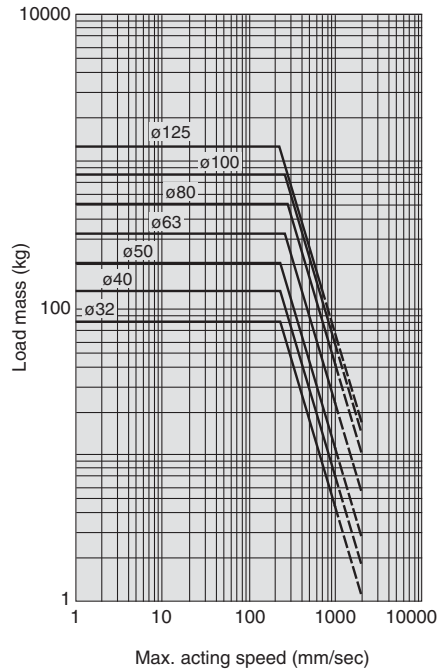

Example: Load limit at rod end when air cylinder ø63 is actuated with max. actuating speed 500 mm/s. See the intersection of lateral axis 500 mm/s and ø63 line, and extend the intersection to left. Thus, the allowable load is 80 kg.

Construction

[First angle projection]

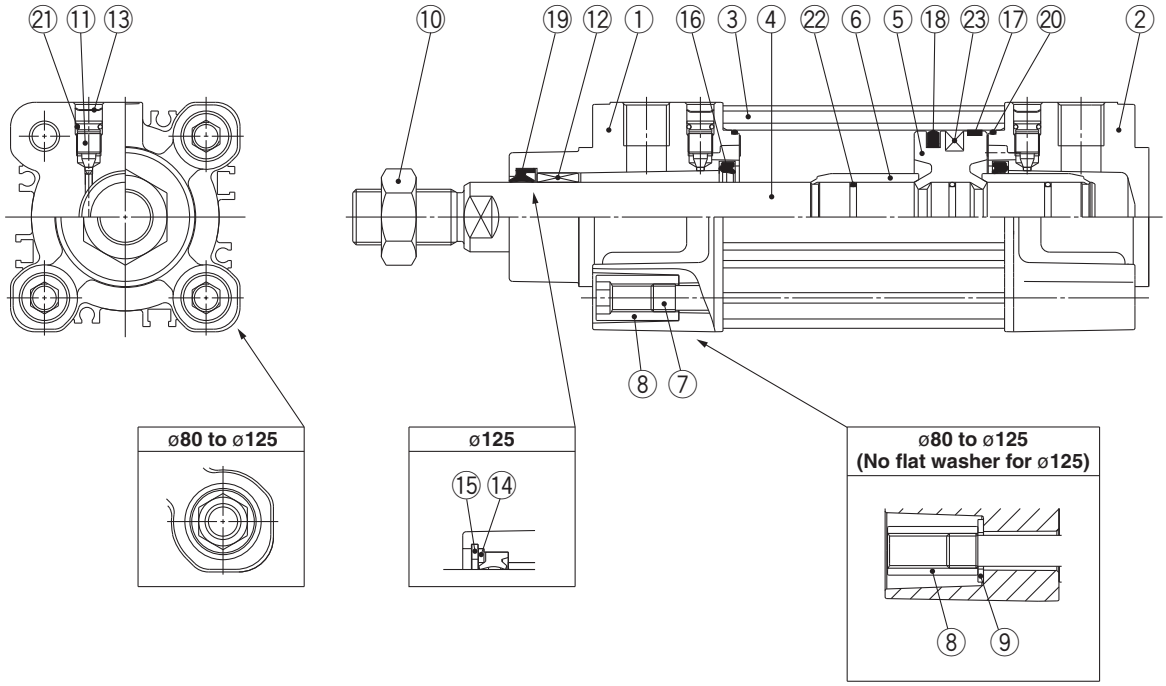

Component Parts

No.	Description	Material	Note
1	**Rod cover**	Aluminium die-casted	
2	**Head cover**	Aluminium die-casted	
3	**Cylinder tube**	Aluminium alloy	
4	**Piston rod**	Carbon steel	
5	**Piston**	Aluminium alloy	
6	**Cushion ring**	Aluminium alloy	
7	**Tie-rod**	Carbon steel	
8	**Tie-rod nut**	Steel	
9	**Flat washer**	Steel	ø80 and ø100
10	**Rod end nut**	Steel	
11	**Cushion valve**	Steel wire	
12	**Bushing**	Bearing alloy	
13	**Snap ring**	Steel for spring	ø40 to ø125
14	**Rod seal holder**	Stainless steel	ø125
15	**Snap ring**	Steel for spring	ø125
16	**Cushion seal**	Urethane rubber	
17	**Wearing**	Resin	
18	**Piston seal**	NBR	
19	**Rod seal**	NBR	
20	**Cylinder tube gasket**	NBR	
21	**Cushion valve seal**	NBR	
22	**Piston gasket**	NBR	
23	**Magnet**		

Replacement Parts: Seal Kit/Single rod

Bore size (mm)	Kit no.	Contents
32	CS95-32	Kits include items ⑯ to ⑳.
40	CS95-40	
50	CS95-50	
63	CS95-63	
80	CS95-80	
100	CS96-100	
125	CS96-125	

∗ Seal kits consist of items ⑯ to ⑳ contained in one kit, and can be orderd using the number for each respective tube bore size.

Seal Kit/Double rod

Bore size (mm)	Kit no.	Contents
32	CS95W-32	Kits include items ⑯ and ⑱ to ⑳
40	CS95W-40	
50	CS95W-50	
63	CS95W-63	
80	CS95W-80	
100	CS96W-100	
125	CS96W-125	

Dimensions: Without Mounting Bracket

[First angle projection]

CP96S(D)B Bore size − Stroke

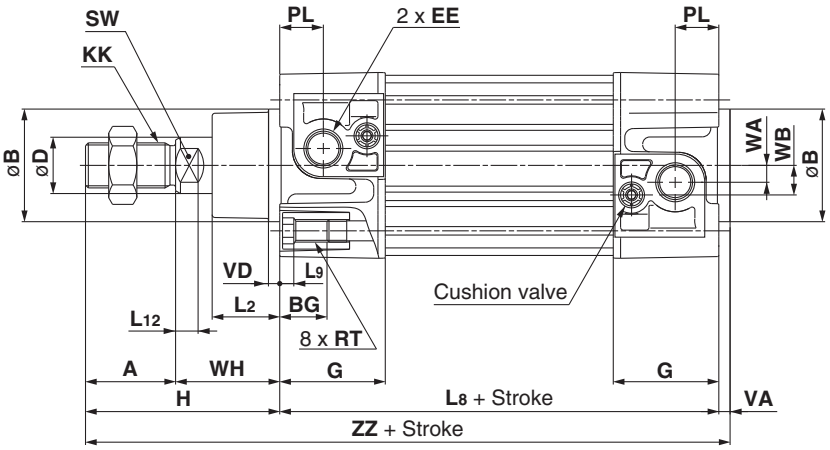

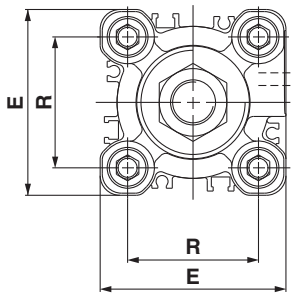

With rod boot

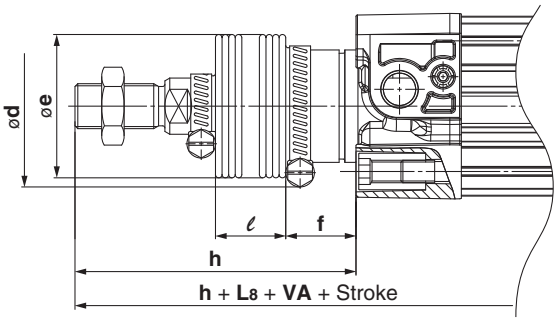

Bore size (mm)	Stroke Range(mm)		A	øB d11	øD	EE	PL	RT	L12	KK	SW	G	BG	L8	VD	VA	WA	WB	WH	ZZ	E	R
	Without rod boot	With rod boot																				
32	to 2000	to 1000	22	30	12	G 1/8	13	M6 x 1	6	M10 x 1.25	10	32	16	94	4	4	4	7	26	146	47	32.5
40	to 2000	to 1000	24	35	16	G 1/4	14	M6 x 1	6.5	M12 x 1.25	13	37.5	16	105	4	4	5	9	30	163	54	38
50	to 2000	to 1000	32	40	20	G 1/4	15.5	M8 x 1.25	8	M16 x 1.5	17	37.5	16	106	4	4	6	10.5	37	179	66	46.5
63	to 2000	to 1000	32	45	20	G 3/8	16.5	M8 x 1.25	8	M16 x 1.5	17	45	16	121	4	4	9	12	37	194	77	56.5
80	to 2000	to 1000	40	45	25	G 3/8	19	M10 x 1.5	10	M20 x 1.5	22	45	17	128	4	4	11.5	14	46	218	99	72
100	to 2000	to 1000	40	55	25	G 1/2	19	M10 x 1.5	10	M20 x 1.5	22	50	17	138	4	4	17	15	51	233	118	89
125	to 2000	to 1000	54	60	32	G 1/2	19	M12 x 1.75	13	M27 x 2	27	58	20	160	6	6	17	15	65	285	144	110

Bore size (mm)	L2	L9	H	ød	øe	f	ℓ											h										
							1 to 50	51 to 100	101 to 150	151 to 200	201 to 300	301 to 400	401 to 500	501 to 600	601 to 700	701 to 800	801 to 900	901 to 1000	1 to 50	51 to 100	101 to 150	151 to 200	201 to 300	301 to 400	401 to 500	501 to 600	601 to 700	701 to 800	801 to 900	901 to 1000
32	15	4	48	54	36	23	12.5	25	37.5	50	75	100	125	150	175	200	225	250	75	88	100	113	138	163	188	213	238	263	288	313
40	17	4	54	54	36	23	12.5	25	37.5	50	75	100	125	150	175	200	225	250	75	88	100	113	138	163	188	213	238	263	288	313
50	24	5	69	64	51	25	12.5	25	37.5	50	75	100	125	150	175	200	225	250	87	100	112	125	150	175	200	225	250	275	300	325
63	24	5	69	64	51	25	12.5	25	37.5	50	75	100	125	150	175	200	225	250	87	100	112	125	150	175	200	225	250	275	300	325
80	30	—	86	68	56	30	12.5	25	37.5	50	75	100	125	150	175	200	225	250	103	116	128	141	166	191	216	241	266	291	316	341
100	32	—	91	76	56	32	12.5	25	37.5	50	75	100	125	150	175	200	225	250	103	116	128	141	166	191	216	241	266	291	316	341
125	40	—	119	82	75	40	10	20	30	40	60	80	100	120	140	160	180	200	130	140	150	160	180	200	220	240	260	280	300	320

Dimensions: Without Mounting Bracket

[First angle projection]

CP96S(D)B Bore size − Stroke W

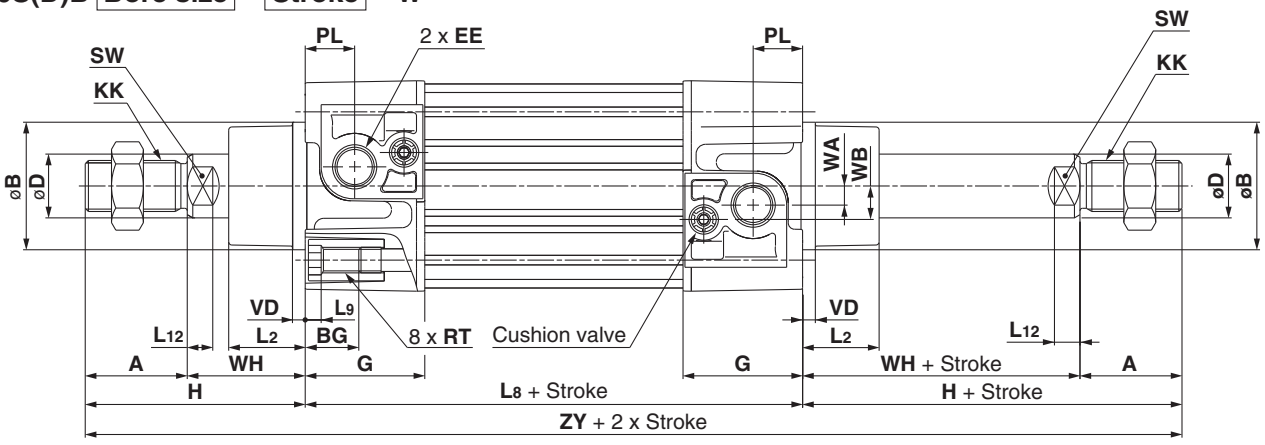

With rod boot at one end

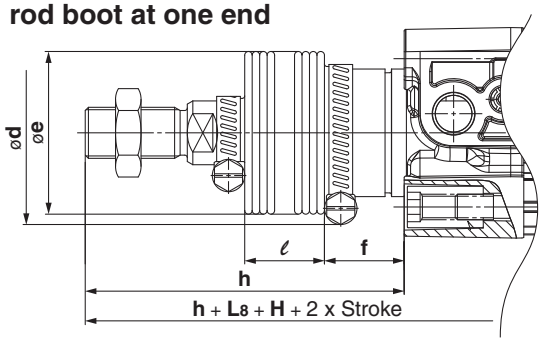

With rod boot at both ends

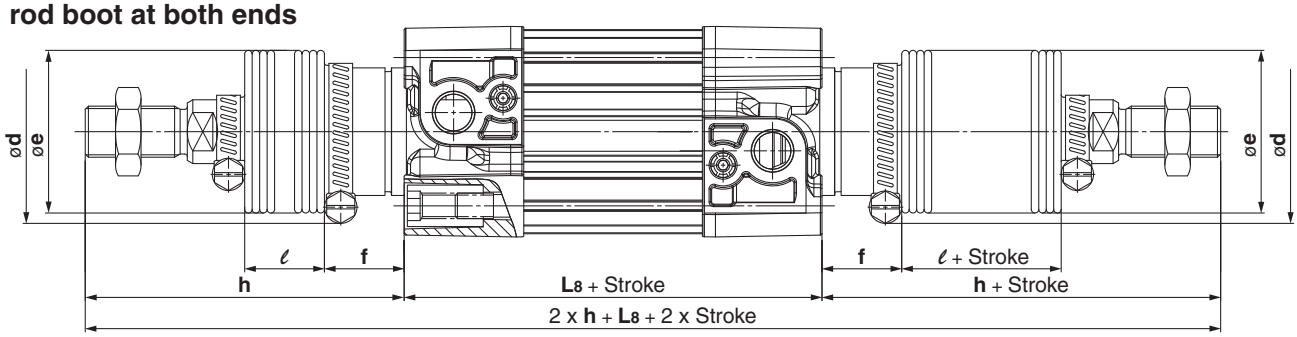

Bore size (mm)	Stroke Range (mm)	A	øB d11	øD	EE	PL	RT	L12	KK	SW	G	BG	L8	VD	WA	WB	WH	ZY	L2	L9
32	to 1000	22	30	12	G 1/8	13	M6 x 1	6	M10 x 1.25	10	32	16	94	4	4	7	26	190	15	4
40	to 1000	24	35	16	G 1/4	14	M6 x 1	6.5	M12 x 1.25	13	37.5	16	105	4	5	9	30	213	17	4
50	to 1000	32	40	20	G 1/4	15.5	M8 x 1.25	8	M16 x 1.5	17	37.5	16	106	4	6	10.5	37	244	24	5
63	to 1000	32	45	20	G 3/8	16.5	M8 x 1.25	8	M16 x 1.5	17	45	16	121	4	9	12	37	259	24	5
80	to 1000	40	45	25	G 3/8	19	M10 x 1.5	10	M20 x 1.5	22	45	17	128	4	11.5	14	46	300	30	—
100	to 1000	40	55	25	G 1/2	19	M10 x 1.5	10	M20 x 1.5	22	50	17	138	4	17	15	51	320	32	—
125	to 1000	54	60	32	G 1/2	19	M12 x 1.75	13	M27 x 2	27	58	20	160	6	17	15	65	398	40	—

Bore size (mm)	H	ød	øe	f	ℓ												h											
					1 to 50	51 to 100	101 to 150	151 to 200	201 to 300	301 to 400	401 to 500	501 to 600	601 to 700	701 to 800	801 to 900	901 to 1000	1 to 50	51 to 100	101 to 150	151 to 200	201 to 300	301 to 400	401 to 500	501 to 600	601 to 700	701 to 800	801 to 900	901 to 1000
32	48	54	36	23	12.5	25	37.5	50	75	100	125	150	175	200	225	250	75	88	100	113	138	163	188	213	238	263	288	313
40	54	54	36	23	12.5	25	37.5	50	75	100	125	150	175	200	225	250	75	88	100	113	138	163	188	213	238	263	288	313
50	69	64	51	25	12.5	25	37.5	50	75	100	125	150	175	200	225	250	87	100	112	125	150	175	200	225	250	275	300	325
63	69	64	51	25	12.5	25	37.5	50	75	100	125	150	175	200	225	250	87	100	112	125	150	175	200	225	250	275	300	325
80	86	68	56	30	12.5	25	37.5	50	75	100	125	150	175	200	225	250	103	116	128	141	166	191	216	241	266	291	316	341
100	91	76	56	32	12.5	25	37.5	50	75	100	125	150	175	200	225	250	103	116	128	141	166	191	216	241	266	291	316	341
125	119	82	75	40	10	20	30	40	60	80	100	120	140	160	180	200	130	140	150	160	180	200	220	240	260	280	300	320

Dimensions: Cylinder Mounting Accessories (L/F/G/C/D)

[First angle projection]

Mounting (L)

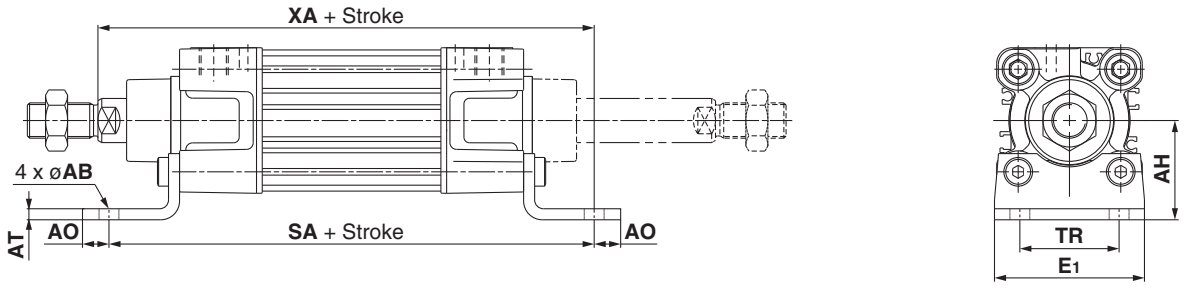

Mounting (F/G)

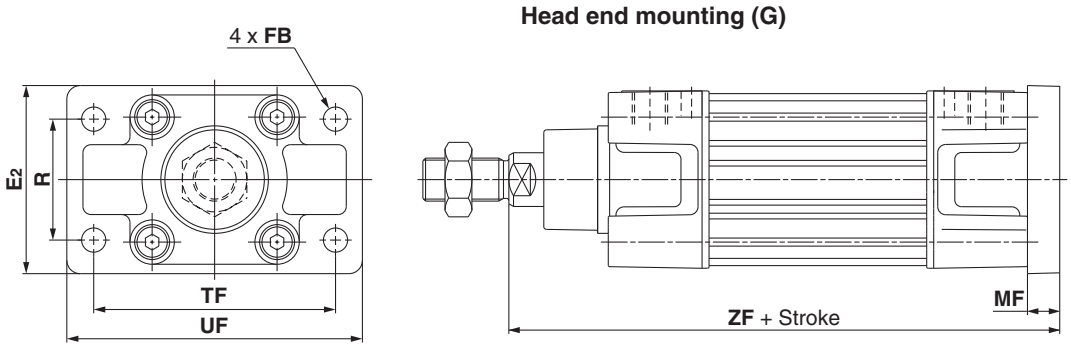

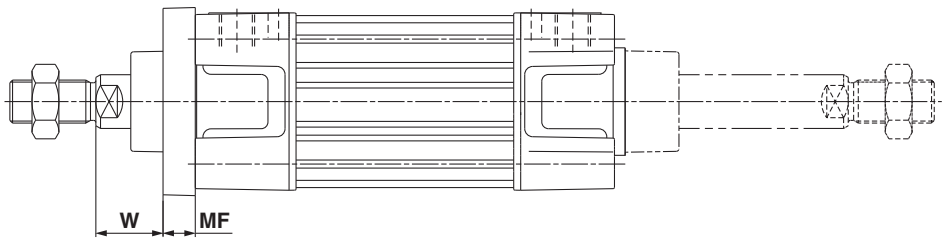

Mounting (C)

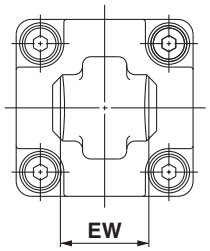

Mounting (D)

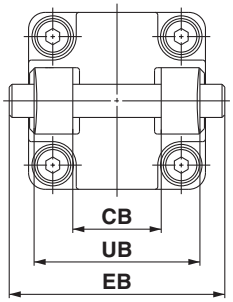

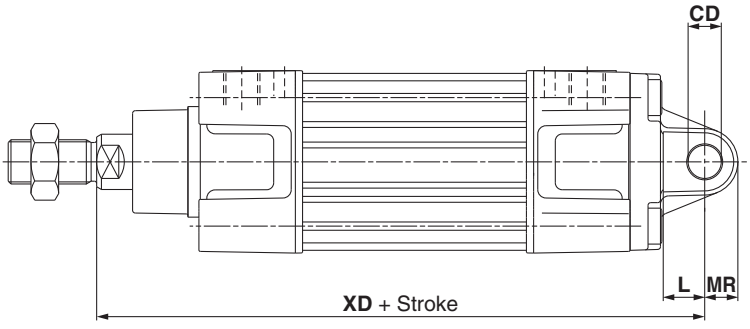

Bore size (mm)	E1	TR	AH	AO	AT	øAB	SA	XA	R	TF	øFB	E2	UF	W	MF	ZF	UB h14	CB H14	EW	øCD H9	L	MR	XD	EB
32	48	32	32	10	4.5	7	142	144	32	64	7	50	79	16	10	130	45	26	26-0.2/-0.6	10	12	9.5	142	65
40	55	36	36	11	4.5	10	161	163	36	72	9	55	90	20	10	145	52	28	28-0.2/-0.6	12	15	12	160	75
50	68	45	45	12	5.5	10	170	175	45	90	9	70	110	25	12	155	60	32	32-0.2/-0.6	12	15	12	170	80
63	80	50	50	12	5.5	10	185	190	50	100	9	80	120	25	12	170	70	40	40-0.2/-0.6	16	20	16	190	90
80	100	63	63	14	6.5	12	210	215	63	126	12	100	153	30	16	190	90	50	50-0.2/-0.6	16	20	16	210	110
100	120	75	71	16	6.5	14.5	220	230	75	150	14	120	178	35	16	205	110	60	60-0.2/-0.6	20	25	20	230	140
125	Max. 157	90	90	Max. 25	8	16	250	270	90	180	16	Max. 157	Max. 224	45	20	245	130	70	70-0.5/-1.2	25	Min. 30	Max. 26	275	Max. 157

Dimensions: Cylinder Mounting Accessories (C/D/E/CS)

[First angle projection]

Mounting (C)

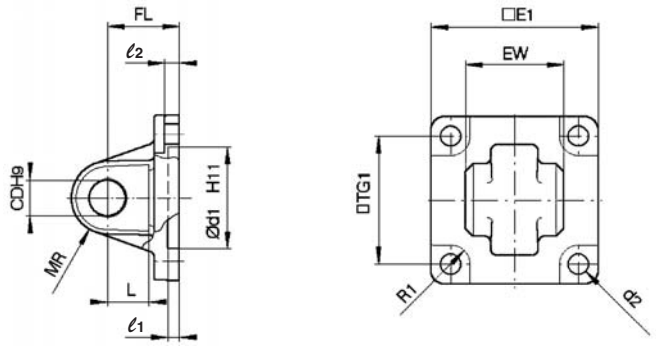

Mounting (D)

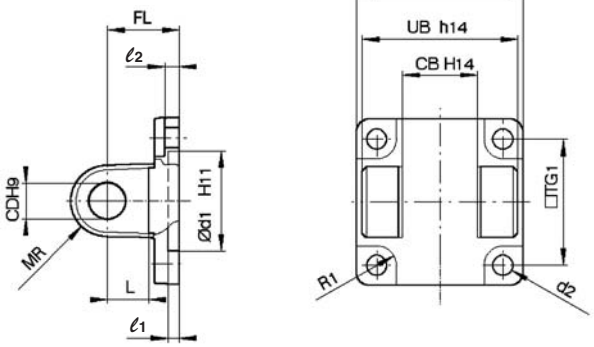

Bore size (mm)	E1	EW	TG1	FL	ℓ1	L	ℓ2	ød1	øCD	MR	ød2	R1	E2	UB	CB
32	45	$26^{-0.2}_{-0.6}$	32.5	22	5	12	5.5	30	10	9.5	6.6	6.5	48	45	26
40	51	$28^{-0.2}_{-0.6}$	38	25	5	15	5.5	35	12	12	6.6	6.5	56	52	28
50	64	$32^{-0.2}_{-0.6}$	46.5	27	5	15	6.5	40	12	12	9	8.5	64	60	32
63	74	$40^{-0.2}_{-0.6}$	56.5	32	5	20	6.5	45	16	16	9	8.5	75	70	40
80	94	$50^{-0.2}_{-0.6}$	72	36	5	20	10	45	16	16	11	11	95	90	50
100	113	$60^{-0.2}_{-0.6}$	89	41	5	25	10	55	20	20	11	12	115	110	60
125	Max. 157	$70^{-0.5}_{-1.2}$	110	50	7	30	10	60	25	26	13.5	10	Max. 157	130	70

Mounting (E)

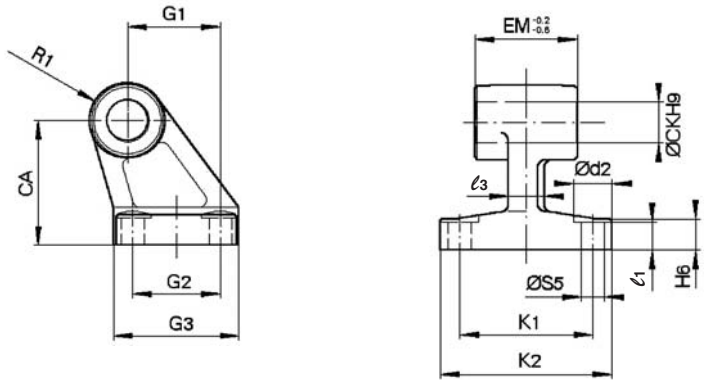

Bore size (mm)	ød2	øCK	øS5	K1	K2 max.	ℓ3 max.	G1	ℓ1	G2	EM	G3 max.	CA	H6	R1
32	11	10	6.6	38	51	10	21	7	18	$26^{-0.2}_{-0.6}$	31	32	8	10
40	11	12	6.6	41	54	10	24	9	22	$28^{-0.2}_{-0.6}$	35	36	10	11
50	15	12	9	50	65	12	33	11	30	$32^{-0.2}_{-0.6}$	45	45	12	12
63	15	16	9	52	67	14	37	11	35	$40^{-0.2}_{-0.6}$	50	50	12	15
80	18	16	11	66	86	18	47	12.5	40	$50^{-0.2}_{-0.6}$	60	63	14	15
100	18	20	11	76	96	20	55	13.5	50	$60^{-0.2}_{-0.6}$	70	71	15	19
125	20	25	14	94	124	30	70	17	60	$70^{-0.5}_{-1.5}$	90	90	20	22.5

Mounting (CS): Head end clevis with ball joint

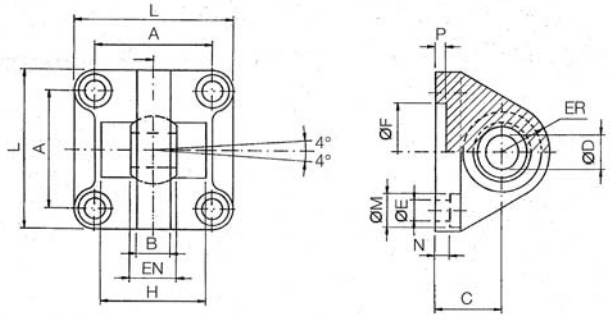

Bore size (mm)	A	B max.	C	øD H7	EN 0 −0.1	ER max.	øF H11	øE	L	øM	N	P	H ±0.5
32	32.5	10.5	22	10	14	15	30	6.6	45	10.5	5.5	5	—
40	38	12	25	12	16	18	35	6.6	55	11	5.5	5	—
50	46.5	15	27	16	21	20	40	9	65	15	6.5	5	51
63	56.5	15	32	16	21	23	45	9	75	15	6.5	5	—
80	72	18	36	20	25	27	45	11	95	18	10	5	70
100	89	18	41	20	25	30	55	11	115	18	10	5	—
125	110	25	50	30	37	40	60	13.5	140	20	10	7	100

∗ Black colour

Dimensions: Cylinder Mounting Accessories (DS/ES)

[First angle projection]

Mounting (DS)

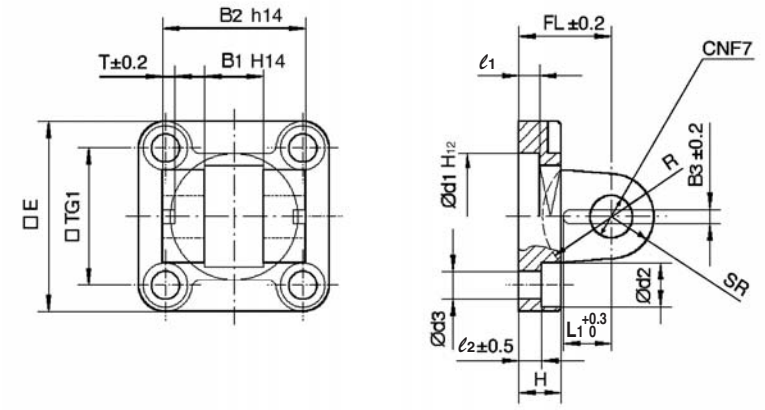

Bore size (mm)	E	B_1	B_2	B_3	L_1	TG_1	T	ℓ_1 min.	ℓ_2	FL	H max.	ød1	ød2	ød3	øCN	SR max.	R
32	45	14	34	3.3	11.5	32.5	3	5	5.5	22	10	30	10.5	6.6	10	11	17
40	55	16	40	4.3	12	38	4	5	5.5	25	10	35	11	6.6	12	13	20
50	65	21	45	4.3	14	46.5	4	5	6.5	27	12	40	15	9	16	18	22
63	75	21	51	4.3	14	56.5	4	5	6.5	32	12	45	15	9	16	18	25
80	95	25	65	4.3	16	72	4	5	10	36	16	45	18	11	20	22	30
100	115	25	75	6.3	16	89	4	5	10	41	16	55	18	11	20	22	32
125	140	37	97	6.3	24	110	6	7	10	50	20	60	20	13.5	30	30	42

∗ Black colour

Mounting (ES)

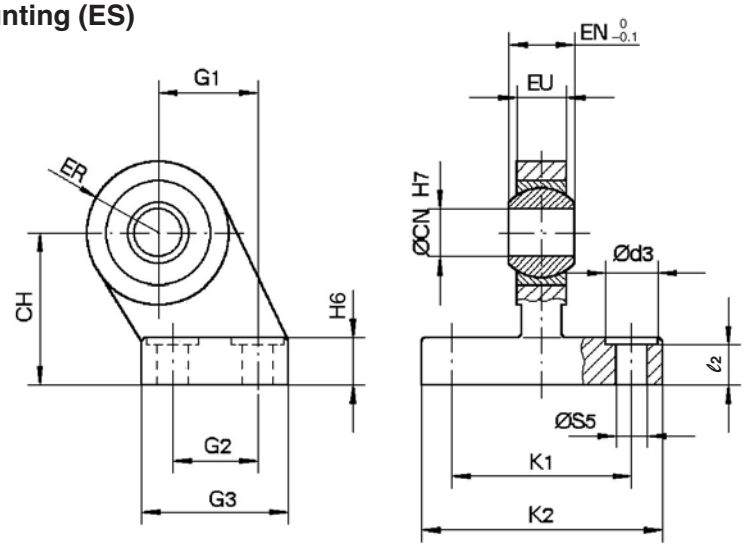

Bore size (mm)	ød3	øCN	øS5	K1	K2 max.	ℓ2	G1	G2	G3 max.	EN	EU	CH	H6	ER max.
32	11	10	6.6	38	51	8.5	21	18	31	14	10.5	32	10	15
40	11	12	6.6	41	54	8.5	24	22	35	16	12	36	10	18
50	15	16	9	50	65	10.5	33	30	45	21	15	45	12	20
63	15	16	9	52	67	10.5	37	35	50	21	15	50	12	23
80	18	20	11	66	86	11.5	47	40	60	25	18	63	14	27
100	18	20	11	76	96	12.5	55	50	70	25	18	71	15	30
125	20	30	13.5	94	124	17	70	60	90	37	25	90	20	40

∗ Black colour

Dimensions: Piston Rod Mounting Accessories

[First angle projection]

Floating Joint JA

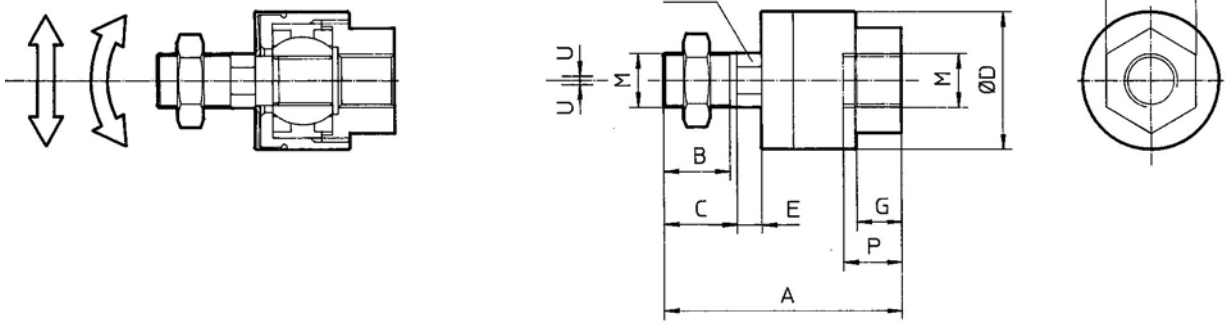

Bore size (mm)	M	Part no.	A	B	C	øD	E	F	G	H	P	U	Load (kN)	Weight (g)	Angle
32	M10 x 1.25	**JA30-10-125**	49.5	19.5	—	24	5	8	8	17	9	0.5	2.5	70	
40	M12 x 1.25	**JA40-12-125**	60	20	—	31	6	11	11	22	13	0.75	4.4	160	
50, 63	M16 x 1.5	**JA50-16-150**	71.5	22	—	41	7.5	14	13.5	27	15	1	11	300	±5°
80, 100	M20 x 1.5	**JAH50-20-150**	101	28	31	59.5	11.5	24	16	32	18	2	18	1080	
125	M27 x 2	**JA125-27-200**	123	34	38	66	13	27	20	41	24	2	28	1500	

∗ Black colour

Rod Clevis GKM (ISO 8140), Supplied with Bolt and Safety Device

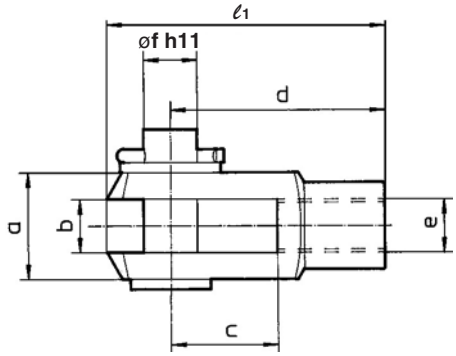

Bore size (mm)	e	Part no.	b	d	øf h11 (Shaft)	øf H9 (Hole)	ℓ1	c min.	a max.
32	M10 x 1.25	**GKM10-20**	$10^{+0.5}_{+0.15}$	40	10	10	52	20	20
40	M12 x 1.25	**GKM12-24**	$12^{+0.5}_{+0.15}$	48	12	12	62	24	24
50, 63	M16 x 1.5	**GKM16-32**	$16^{+0.5}_{+0.15}$	64	16	16	83	32	32
80, 100	M20 x 1.5	**GKM20-40**	$20^{+0.5}_{+0.15}$	80	20	20	105	40	40
125	M27 x 2	**GKM30-54**	$30^{+0.5}_{+0.15}$	110	30	30	148	54	55

Piston Rod Ball Joint KJ (ISO 8139)

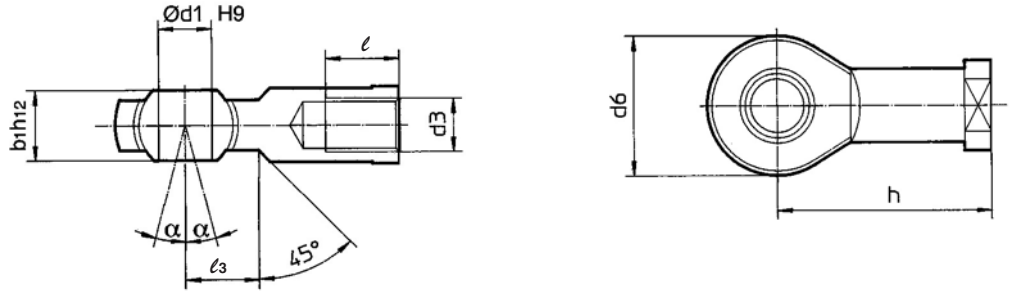

Bore size (mm)	d3	Part no.	ød1 H9	h	d6 max.	b1 h12	ℓ min.	α	ℓ3
32	M10 x 1.25	**KJ10D**	10	43	28	14	20	4°	15
40	M12 x 1.25	**KJ12D**	12	50	32	16	22	4°	17
50, 63	M16 x 1.5	**KJ16D**	16	64	42	21	28	4°	23
80, 100	M20 x 1.5	**KJ20D**	20	77	50	25	33	4°	27
125	M27 x 2	**KJ27D**	30	110	70	37	51	4°	36

ISO Cylinder: Non-rotating Rod Type
Double Acting, Single/Double Rod
Series CP96K
ø32, ø40, ø50, ø63, ø80, ø100

How to Order

With auto switch **CP96KD B 32 – 100 W – M9BW S**

Built-in magnet

Mounting

B	Basic/Without bracket
L	Axial foot
F	Rod end flange
G	Head end flange
C	Single rear clevis
D	Double rear clevis

Bore size

32	32 mm
40	40 mm
50	50 mm
63	63 mm
80	80 mm
100	100 mm

Rod

—	Single rod
W	Double rod

Stroke (mm)
(Refer to "Maximum Stroke" on page 16.)

Auto switch

—	Without auto switch

∗ For applicable auto switch model, refer to the below table.

Number of auto switches

—	2 pcs.
S	1 pc.
3	3 pcs.
n	"n" pcs.

Applicable Auto Switches/Tie-rod Mounting

Type	Special function	Electrical entry	Indicator light	Wiring (Output)	Load voltage DC		Load voltage AC	Auto switch model	Lead wire length (m) 0.5 (—)	1 (M)	3 (L)	5 (Z)	Pre-wired connector	Applicable load	
Solid state switch	—	Grommet	Yes	3-wire (NPN)	24 V	5 V, 12 V	—	**M9N**	●	●	●	○	○	IC	Relay, PLC
				3-wire (PNP)				**M9P**	●	●	●	○	○		
				2-wire		12 V		**M9B**	●	●	●	○	○	—	
	Diagnosis indication (2-colour)	Grommet		3-wire (NPN)		5 V, 12 V		**M9NW**	●	●	●	○	○	IC	
				3-wire (PNP)				**M9PW**	●	●	●	○	○		
				2-wire		12 V		**M9BW**	●	●	●	○	○	—	
	Water resistant (2-colour)			3-wire (NPN)		5 V, 12 V		**M9NA**∗∗	○	○	●	○	○	IC	
				3-wire (PNP)				**M9PA**∗∗	○	○	●	○	○		
				2-wire		12 V		**M9BA**∗∗	○	○	●	○	○	—	
Reed switch	—	Grommet	Yes	3-wire (Equiv. to NPN)	—	5 V	—	**A96**	●	—	●	—	—	IC	—
			None	2-wire	24 V	12 V	100 V	**A93**	●	—	●	—	—	—	Relay, PLC
							100 V or less	**A90**	●	—	●	—	—	IC	

∗ Lead wire length symbols: 0.5 m ····· — (Example) M9NW
1 m ····· M (Example) M9NWM
3 m ····· L (Example) M9NWL
5 m ····· Z (Example) M9NWZ

∗ Solid state switches marked with "○" are produced upon receipt of order.

∗ Since there are other applicable auto switches than listed, refer to the auto switch guide.
∗ For details about auto switches with pre-wired connector, refer to the auto switch guide.
∗ D-A9□, M9□, M9□W, M9□AL are shipped together, (but not assembled).
(Switch mounting bracket is only assembled at the time of shipment.)
∗∗ Water resistant type auto switches can be mounted on the above models, but in such case SMC cannot guarantee water resistance.
Consult with SMC regarding water resistant types with the above model numbers.
Note) D-Y59A, Y69A, Y7P, Y7□W, Z7□, Z80 type cannot be mounted on the CP96 series.
Moreover, D-M9□□ and A9□ type cannot be mounted on square groove of the CP96 series.

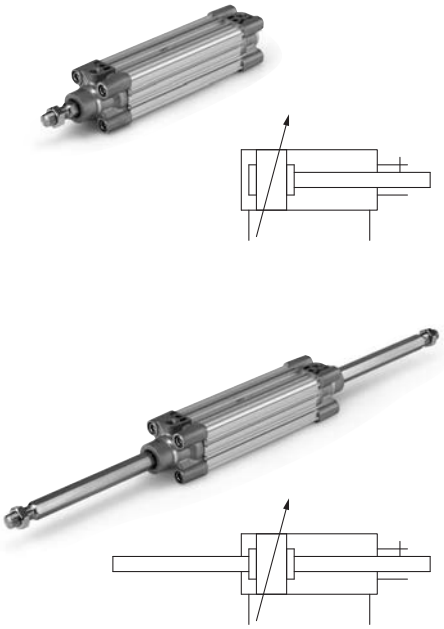

Specifications

Bore size (mm)	32	40	50	63	80	100
Action	Double acting					
Fluid	Air					
Proof pressure	1.5 MPa					
Max. operating pressure	1.0 MPa					
Min. operating pressure	0.05 MPa					
Ambient and fluid temperature	Without auto switch: –20 to 70°C∗ With auto switch: –10 to 60°C∗					
Lubrication	Not required (Non-lube)					
Operating piston speed	50 to 1000 mm/s					
Allowable stroke tolerance	Up to 250 st: $^{+1.0}_{0}$, 251 to 1000 st: $^{+1.4}_{0}$					
Cushion	Both ends (Air cushion)					
Port size	G 1/8	G 1/4	G 1/4	G 3/8	G 3/8	G 1/2
Mounting	Basic, Axial foot, Rod end flange, Head end flange, Single clevis, Double clevis, Centre trunnion					
Non-rotating accuracy	±0.5°		±0.5°		±0.3°	
Allowable rotating torque Nm max.	0.25	0.45	0.64		0.79	

∗ No freezing

Minimum Stroke for Auto Switch Mounting

Refer to page 19 for “Minimum Stroke for Auto Switch Mounting”.

Maximum stroke

Bore size (mm)	Max. stroke∗
32	500
40	500
50	600
63	600
80	800
100	800

Intermediate strokes are available.
∗ Please consult with SMC for longer strokes.

Accessories

Mounting		Basic	Foot	Rod end flange	Head end flange	Single clevis	Double clevis	Centre trunnion
Standard	Rod end nut	●	●	●	●	●	●	—
	Clevis pin	—	—	—	—	—	●	—
Option	Piston rod ball joint	●	●	●	●	●	●	—
	Rod clevis	●	●	●	●	●	●	—
	Rod boot	—	—	—	—	—	—	—

∗ Please do not use a piston rod ball joint (or floating joint) together with a head end clevis with a ball joint (or angled head end clevis with a ball joint).

Construction

[First angle projection]

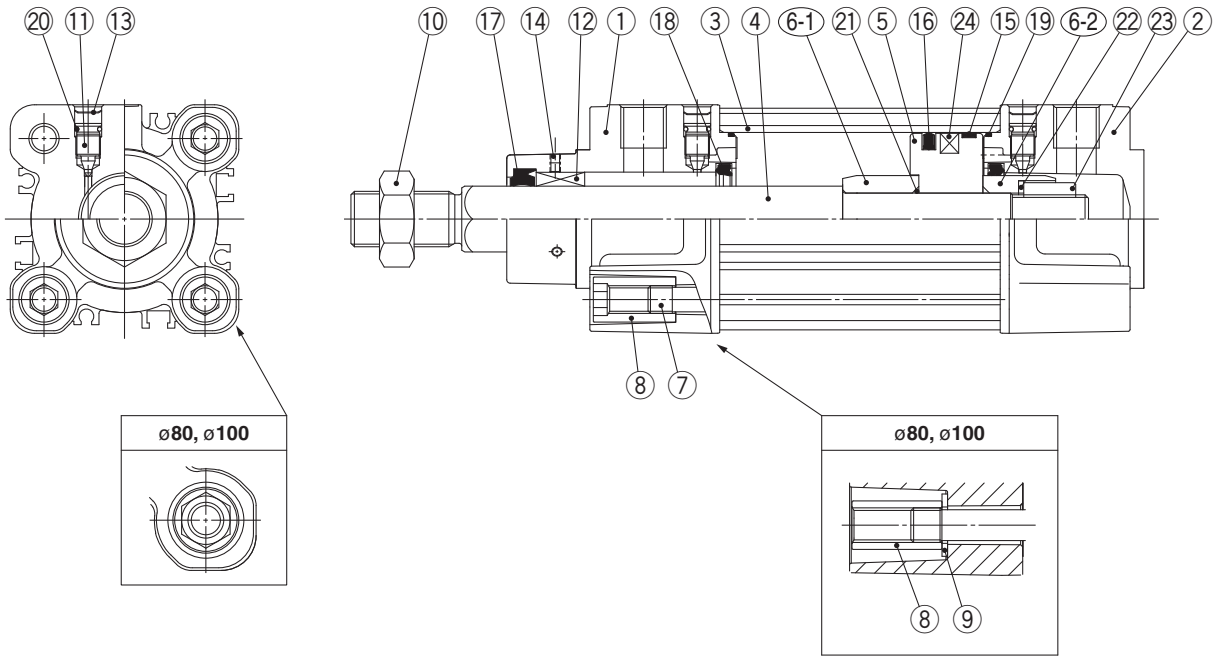

Component Parts

No.	Description	Material	Note
1	**Rod cover**	Aluminium die-casted	
2	**Head cover**	Aluminium die-casted	
3	**Cylinder tube**	Aluminium alloy	
4	**Piston rod**	Stainless steel	
5	**Piston**	Aluminium alloy	
6-1	**Cushion ring**	steel	
6-2	**Cushion ring**	steel	
7	**Tie-rod**	Carbon steel	
8	**Tie-rod nut**	Steel	
9	**Flat washer**	Steel	ø80 and ø100
10	**Rod end nut**	Steel	
11	**Cushion valve**	Steel wire	
12	**Non-rotating guide**	Bearing alloy	
13	**Snap ring**	Steel for spring	ø40 to ø100
14	**Set screw**	Steel	
15	**Wearing**	Resin	
16	**Piston seal**	NBR	
17	**Rod seal**	NBR	
18	**Cushion seal**	Urethane rubber	
19	**Cylinder tube gasket**	NBR	
20	**Cushion valve seal**	NBR	
21	**Piston gasket**	NBR	
22	**Spring washer**	Steel	
23	**Piston nut**	Steel	
24	**Magnet**		

Replacement Parts: Seal Kit/Single rod

Bore size (mm)	Kit no.	Contents
32	CK95-32	Kits include items ⑮ to ⑲.
40	CK95-40	
50	CK95-50	
63	CK95-63	
80	CK95-80	
100	CK96-100	

∗ Seal kits consist of items ⑮ to ⑲ contained in one kit, and can be orderd using the number for each respective tube bore size.

Seal Kit/Double rod

Bore size (mm)	Kit no.	Contents
32	CK95W-32	Kits include items ⑯ to ⑲.
40	CK95W-40	
50	CK95W-50	
63	CK95W-63	
80	CK95W-80	
100	CK96W-100	

Dimensions: Without Mounting Bracket

[First angle projection]

CP96K(D)B Bore size – Stroke

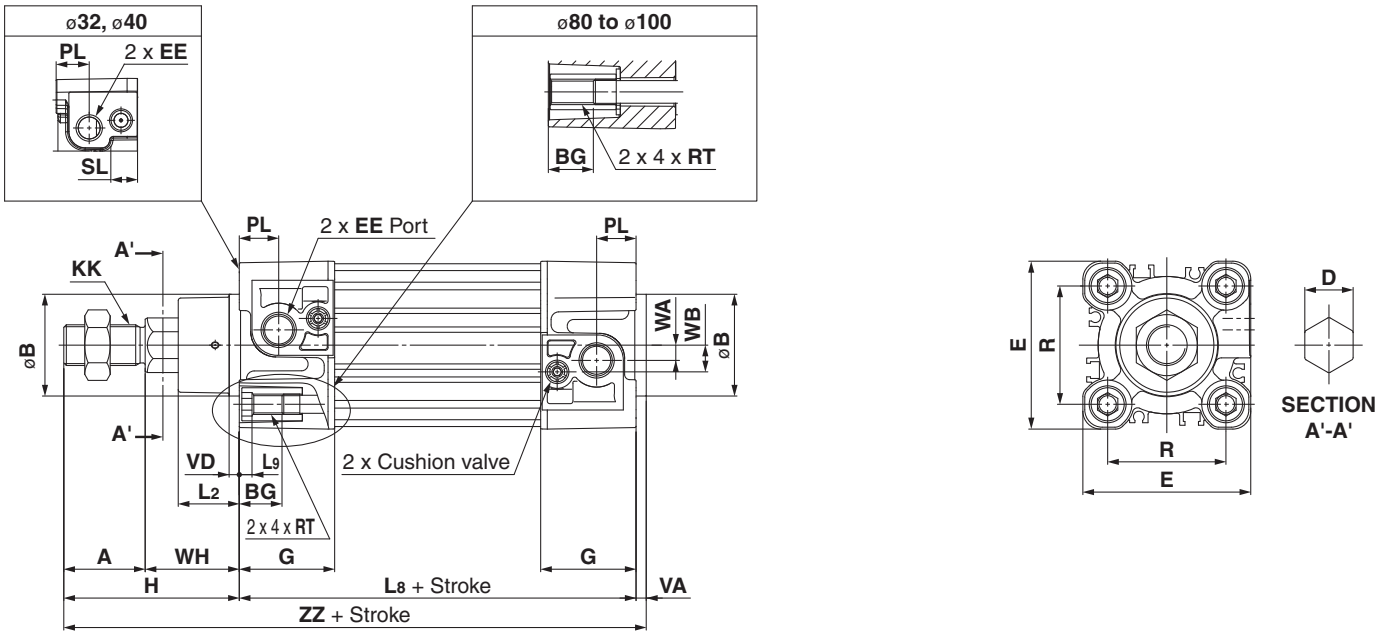

CP96K(D)B Bore size – Stroke W

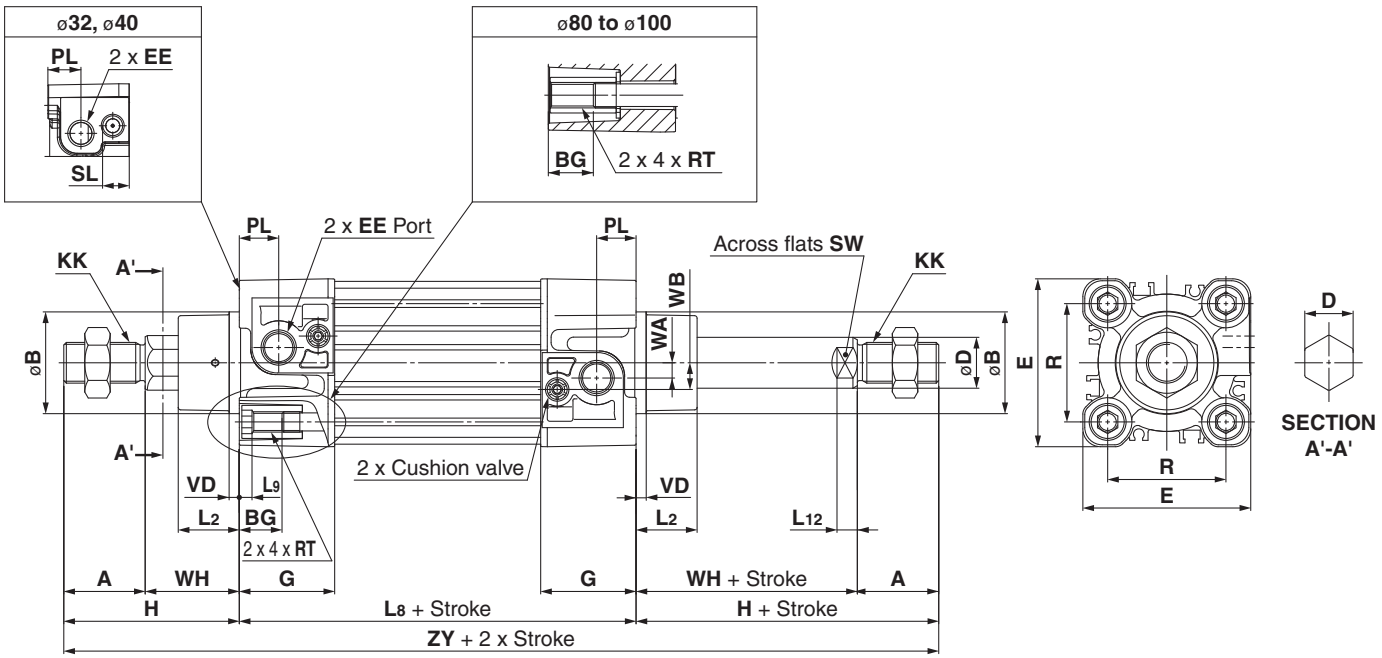

∗ Mounting bracket are the same as standard type.
Refer to page 11 for details.

Bore size (mm)	Stroke Range (mm)	A	øB d11	D	øD	EE	PL	RT	L12	KK	SW	G	BG	L8	VD	VA	WA	WB	WH	ZZ	ZY	E	R	L2	L9	H	SL
32	to 500	22	30	12.2	12	G 1/8	13	M6 x 1	6	M10 x 1.25	10	32	16	94	4	4	4	7	26	146	190	47	32.5	15	4	48	10
40	to 500	24	35	14.2	16	G 1/4	14	M6 x 1	6.5	M12 x 1.25	13	37.5	16	105	4	4	5	9	30	163	213	54	38	17	4	54	12
50	to 600	32	40	19	20	G 1/4	15.5	M8 x 1.25	8	M16 x 1.5	17	37.5	16	106	4	4	6	10.5	37	179	244	66	46.5	24	5	69	—
63	to 600	32	45	19	20	G 3/8	16.5	M8 x 1.25	8	M16 x 1.5	17	45	16	121	4	4	9	12	37	194	259	77	56.5	24	5	69	—
80	to 800	40	45	23	25	G 3/8	19	M10 x 1.5	10	M20 x 1.5	22	45	17	128	4	4	11.5	14	46	218	300	99	72	30	—	86	—
100	to 800	40	55	23	25	G 1/2	19	M10 x 1.5	10	M20 x 1.5	22	50	17	138	4	4	17	15	51	233	320	118	89	32	—	91	—

Auto Switch Mounting 1

Minimum Stroke for Auto Switch Mounting

(mm)

Auto switch model	Number of auto switch mounted	32	40	50	63	80	100	125
D-M9□	2 switches (Different side, Same side)	15				10		
	1 switch	15				10		
	Other qty.	15+5 (n-2)				10+10 (n-2)		
D-M9□W D-M9□AL	2 switches (Different side, Same side)	15				10		
	1 switch	15				10		
	Other qty.	15+10 (n-2)				10+10 (n-2)		10+15 (n-2)
D-A9□	2 switches (Different side, Same side)	15						
	1 switch	15				10		
	Other qty.	15+10 (n-2)		15+15 (n-2)				15+20 (n-2)

∗ n = 3, 4, 5 ···

Recommended Mounting Position for Stroke Ends

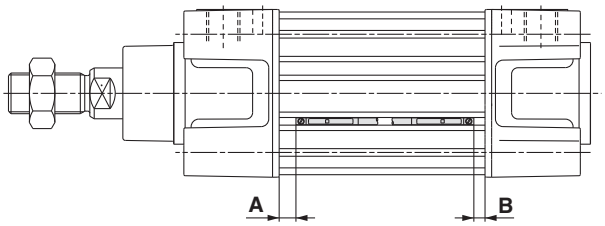

Auto Switch Proper Mounting Position

(mm)

Auto switch model / Bore size	D-M9□ D-M9□W D-M9□AL		D-A9□	
	A	B	A	B
32	10.5	8	6.5	4
40	10.5	8	6.5	4
50	11	8.5	7	4.5
63	11	8.5	7	4.5
80	14	12.5	10	8.5
100	14	12.5	10	8.5
125	16	16	12	12

∗ Adjust the auto switch after confirming the operation to set actually.

Operating Range

(mm)

Auto switch model	Bore size						
	32	40	50	63	80	100	125
D-M9□ D-M9□W D-M9□AL	4	4	5	6	5.5	6	7
D-A9□	7	8	8.5	9.5	9.5	10.5	12.5

Note) Since this is a guideline including hysteresis, not meant to be guaranteed. (Assuming approximately ±30% dispersion)
There may be the case it will vary substantially depending on an ambient environment.

Besides the models listed "How to Order," the following auto switches are applicable.

∗ Normally closed (NC = b contact), solid state switch (D-F9G, F9H type) are also available.
For details, refer to the auto switch guide.

Auto Switch Mounting 2

How to Mount and Move the Auto Switch

<Applicable Auto Switch>

Solid state switch ····· D-M9N/M9P/M9B
D-M9NW/M9PW/M9BW
D-M9NAL/M9PAL/M9BAL
Reed switch ····· D-A90/A93/A96

How to Mount and Move the Auto Switch

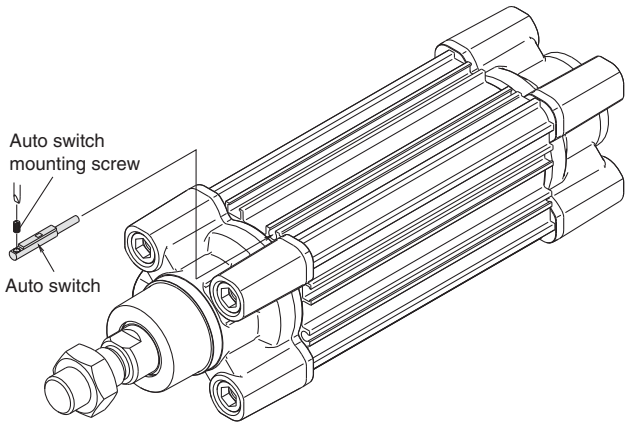

• Please use a watchmaker's screwdriver with a handle diameter of 5 to 6 mm when tightening the auto switch mounting screw. A torque of 0.05 to 0.15 N·m should be used for D-M9□, M9□W, M9□AL, and 0.10 to 0.20 N·m for D-A9□. Once the screw starts to feel tight, tighten it further by approximately another 90°.

Note) D-M9□□ and A9□ type cannot be mounted on square groove of the CP96 series.

ISO Cylinder: Double Acting

Series 55-CP96

ø32, ø40, ø50, ø63, ø80, ø100, ø125

How to Order

55-CP96SD B 32 – 100 W – ☐

ATEX category 2

Piston rod type

S	Standard
K	Non-rotating rod (32~100 only)

Built-in magnet

Mounting

B	Basic/Without bracket
L	Axial foot
F	Rod end flange
G	Head end flange
C	Single clevis
D	Double clevis

Bore size

32	32 mm
40	40 mm
50	50 mm
63	63 mm
80	80 mm
100	100 mm
125	125 mm

Stroke (mm)
Refer to standard stroke table

Rod Specifications

—	Single rod
W	Double rod

Made to order *

—	Standard
-XA□	Special rod end change
-XC4	With heavy duty scraper (32 ~ 100 only)
-XC7	Tie rod, cushion valve, tie-rod nut, etc, made of stainless steel
-XC22	Fluororubber seals
-XC68	Stainless steel rod and nut

* Only for Standard type

Classification	Without magnet type	With magnet type D
2 GD c	T 85°C (T5) Ta -20°C to 40°C T 105°C (T4) Ta 40°C to 60°C	T 85°C (T5) Ta -10°C to 40°C T 105°C (T4) Ta 40°C to 60°C

[For 55-CP96]
When using an Auto switch, select the appropriate switch from the following table and order it separately.

Applicable auto switch specifications
Auto switch only conforms to Category 3. (II 3GD EEx nA II T5x -10°C ≤Ta≤ +60°C IP67.)
For detailed specifications on the D-M9□, D-M9□W, D-A93 and D-A90, please refer to the auto switch guide.
(Note: Reed auto switches for AC 100V and DC 100V are not within the specification.)

Type	Special function	Model No.	Electrical entry	Indicator	Wiring (Output)	Load voltage DC		Load voltage AC	Lead wire (m) 0.5 (—)	1 (M)	3 (L)	5 (Z)	Applicable load	
Solid state switch	—	D-M9N□-588	Grommet	Yes	3-wire (NPN)	24 V	5 V, 12 V	—	●	—	●	○	IC	Relay PLC
		D-M9P□-588			3-wire (PNP)				●	—	●	○		
		D-M9B□-588			2-wire		12 V		●	—	●	○	—	
	Diagnosis indication (2-colour)	D-M9NW□-588			3-wire (NPN)		5 V, 12 V		●	●	●	○	IC	
		D-M9PW□-588			3-wire (PNP)				●	●	●	○		
		D-M9BW□-588			2-wire		12 V	—	●	●	●	○	—	
Reed switch	—	D-A93□-588	Grommet	Yes	2-wire	24 V	12 V	100 V	●	—	●	—	—	Relay PLC
		D-A90□-588		None				100 V or less	●	—	●	—	IC	

* Lead wire length symbols: 0.5 m ····· — (Example) D-M9BW-588
1 m ····· M (Example) D-M9BWM-588
3 m ····· L (Example) D-M9BWL-588
5 m ····· Z (Example) D-M9BWZ-588

Note 1) ○ solid state auto switch is available after receiving an order.

Note 2) When mounting an auto switch on a 55- series (Category 2) Model, the ATEX category of the auto switch cylinder changes to Category 3, which is the same category as the auto switch.

ISO Cylinder

Series C96

ø32, ø40, ø50, ø63, ø80, ø100, ø125

Conforming to ISO 15552

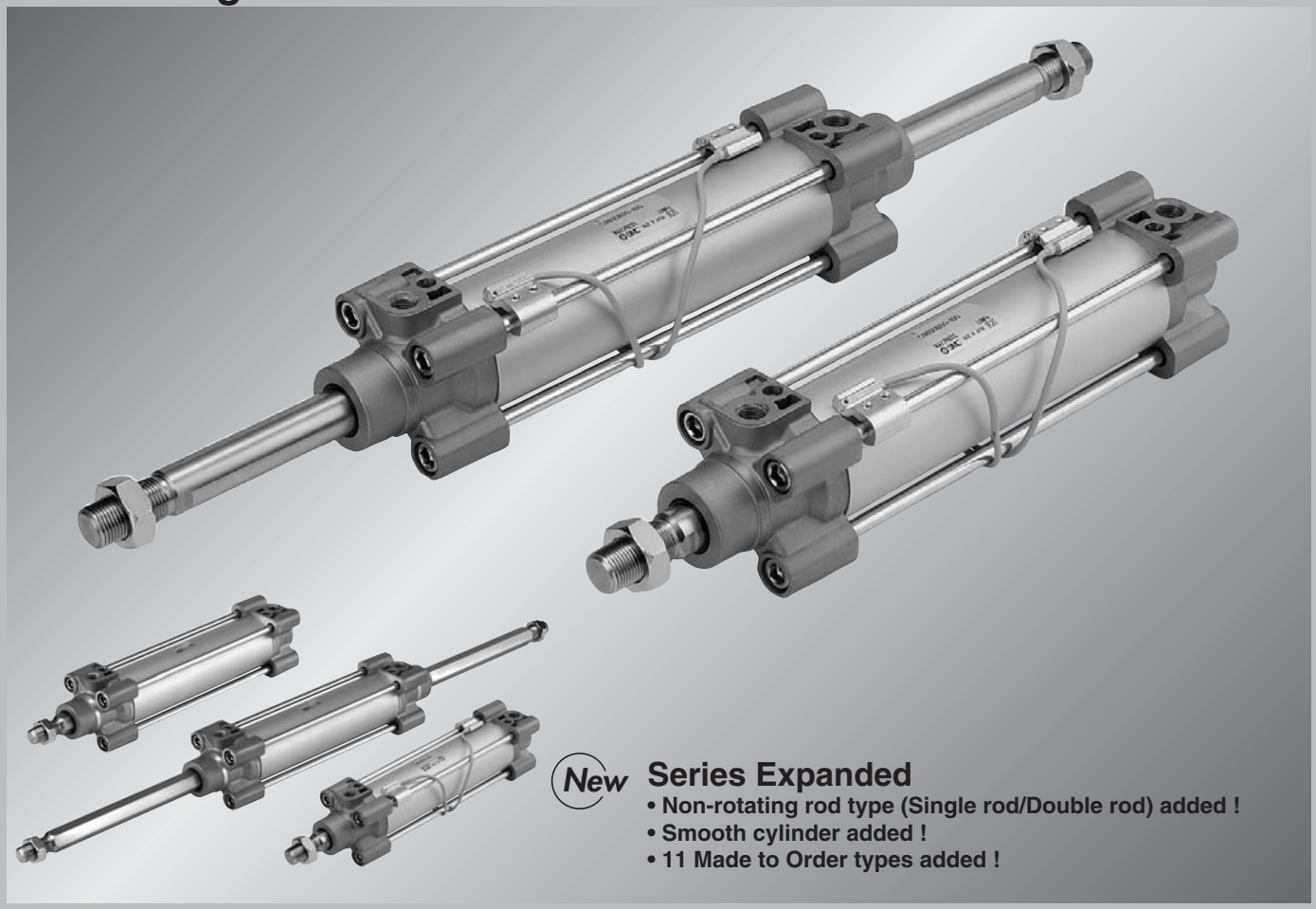

New **Series Expanded**

- **Non-rotating rod type (Single rod/Double rod) added !**
- **Smooth cylinder added !**
- **11 Made to Order types added !**

Variations

Series	Action	Type		Basic	Built-in magnet	Rod boot	Bore (mm)
Standard *Series C96*	Double acting	Single rod	Non-lube	●	●	●	32, 40, 50, 63 80, 100, 125
		Double rod	Non-lube	●	●	●	
Standard/Non-rotating rod *Series C96K*	Double acting	Single rod	Non-lube	●	●	●	32, 40, 50, 63 80, 100
		Double rod	Non-lube	●	●	●	
Smooth cylinder *Series C96Y*	Double acting	Single rod	Non-lube	●	●		32, 40, 50, 63 80, 100, 125

Series C96

Improved end of stroke cushion capacity

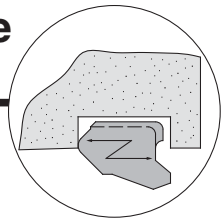

Piston rod lurching has been eliminated at the end of stroke positions by means of a floating seal mechanism.

Air cylinder Compact and light design

Reduced weight due to a change in the configuration of the cover.

New Non-rotating rod type added !

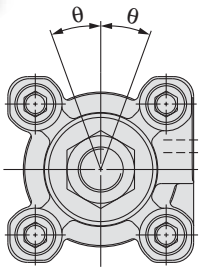

Non-rotating accuracy (mm)

Bore size	θ
ø32 to ø63	±0.5°
ø80, ø100	±0.3°

New Standard type with rod boot specifications.

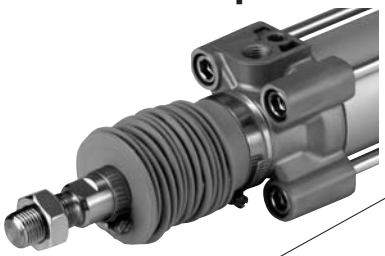

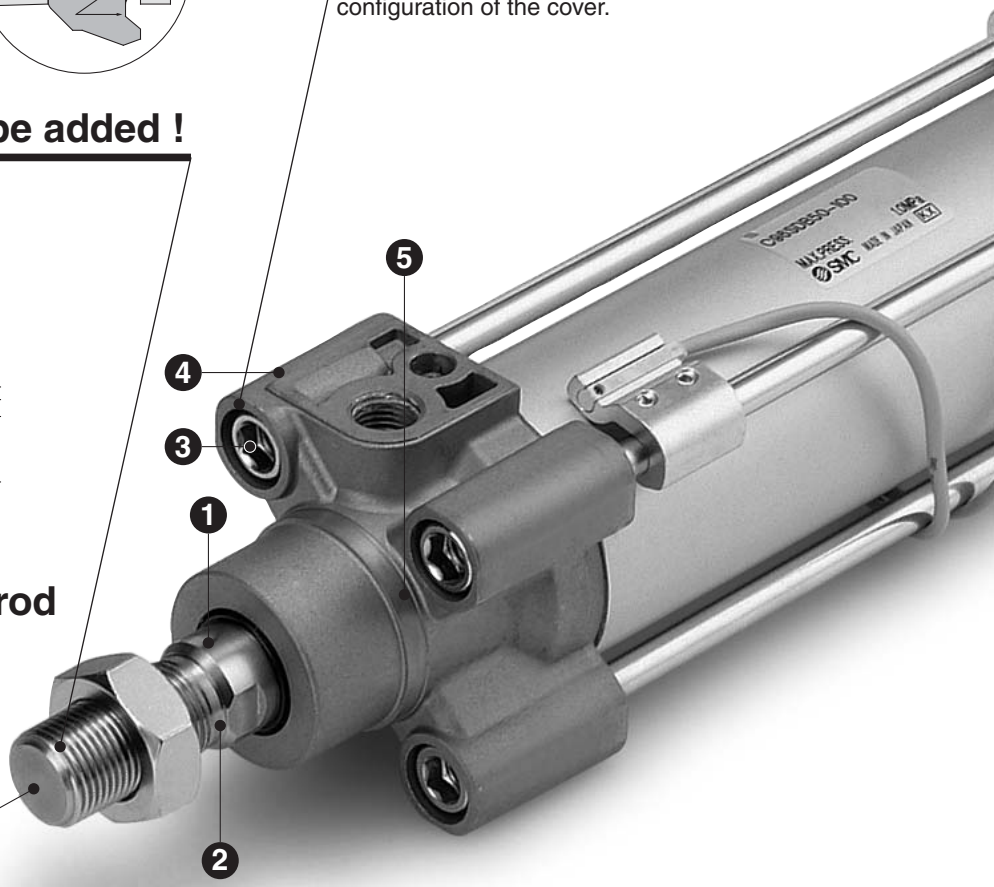

Improved mounting accuracy

High accuracy covers and tie rod nuts simplify the mounting process and also extend cylinder life.

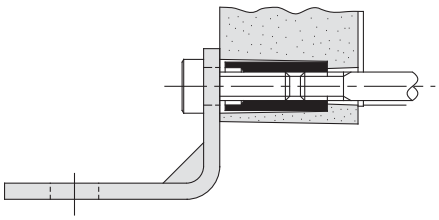

Piston rod deflection reduced

Deflection of the piston rod has been reduced by increasing the precision of the bushing and piston rod, and reducing the tolerances.

[Differences between the C96 and the CP95 series]

❶ ø25 mm piston rod diameter for ø100
Conforming to German automobile association standard (VDA)

❷ Rod end nut can be screwed up to TRP.

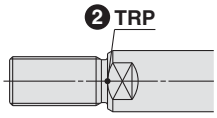

❸ Tie-rod nuts changed to conform to the ISO 15552 standard (ø80 to ø125)

❹ Surface treatment painting is now avoided due to environmental concerns. Coating trivalent chromate only.

❺ Uses an iron-based sintered material for the bushing (ø32 to ø100)

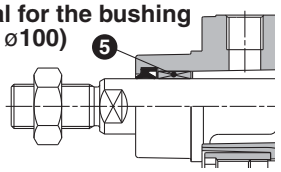

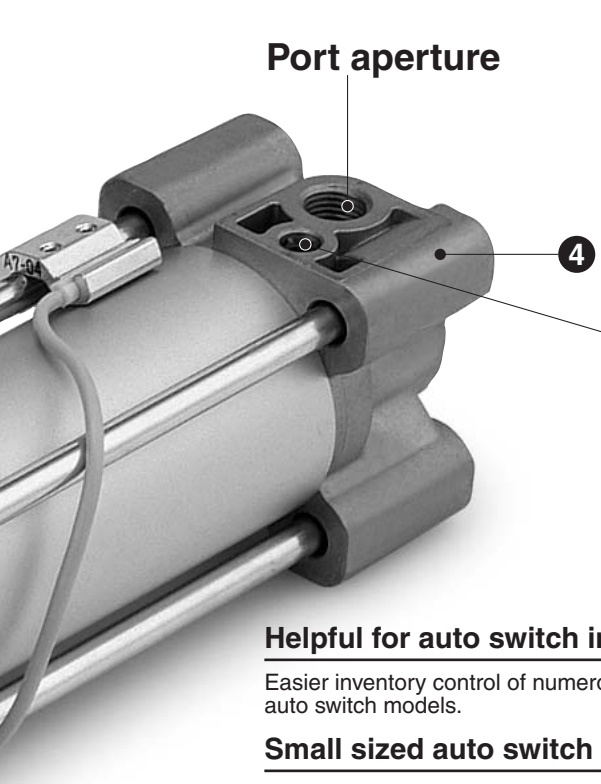

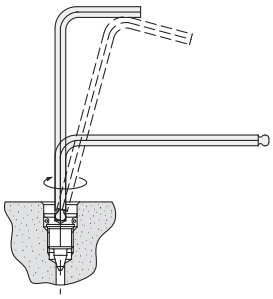

Simple end of stroke cushion valve adjustment

Since the adjustment of the cushion valve is performed with a hex wrench key, even finite control can be easily accomplished.
Furthermore, the cushion valve has been recessed so that it does not protrude from the cover.

Helpful for auto switch inventory control

Easier inventory control of numerous direct mounting auto switch models.

Small sized auto switch can be attached.*

Solid state: D-M9□ Reed: D-A9□
D-M9□W

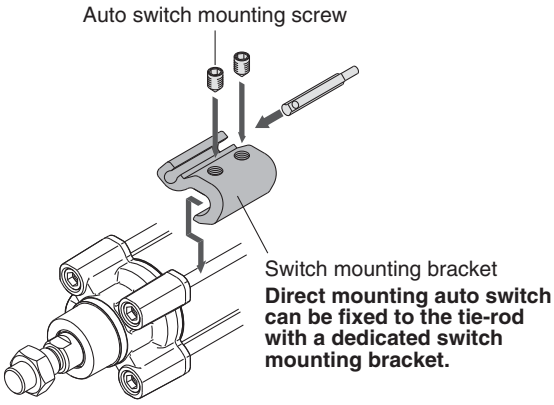

Direct mounting auto switch can be fixed to the tie-rod with a dedicated switch mounting bracket.

Improved handling performance

Auto switch mounting and mounting position adjustment can be made in a one way direction.

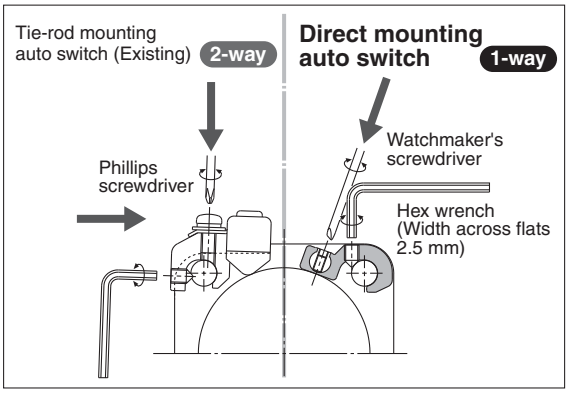

New Made to Order added !

Improvement in applications by made to order specifications.

Symbol	Specifications	Standard type		Non-rotating rod type		Smooth cylinder
		Single rod	Double rod	Single rod	Double rod	Single rod
-XA□	Change of rod end shape	○	○	—	—	○
-XC14	Change of trunnion bracket mounting position	○	○	—	—	—
-XB6	Heat resistant cylinder (–10 to 150°C)	○	○	—	—	—
-XB7	Cold resistant cylinder (–40 to 70°C)	○	—	—	—	—
-XC4	With heavy duty scraper	○	○	—	—	—
-XC7	Tie-rod, cushion valve, tie-rod nut, etc. made of stainless steel	○	○	—	—	—
-XC10	Dual stroke cylinder/Double rod type	○	—	—	—	—
-XC11	Dual stroke cylinder/Single rod type	○	—	—	—	—
-XC22	Fluororubber seals	○	○	—	—	—
-XC35	With coil scraper	○	○	—	—	—
-XC68	Made of stainless steel (With hard chrome plated piston rod)	○	○	—	—	—

ISO Cylinder: Standard
Double Acting, Single/Double Rod
Series C96
ø32, ø40, ø50, ø63, ø80, ø100, ø125

How to Order

With auto switch **C96SD B 32 – 100 J W – M9BW S –**

Built-in magnet

Mounting

B	Basic/Without bracket
L	Axial foot
F	Rod end flange
G	Head end flange
C	Single clevis
D	Double clevis
T	Centre trunnion

Bore size

32	32 mm
40	40 mm
50	50 mm
63	63 mm
80	80 mm
100	100 mm
125	125 mm

Stroke (mm)
Refer to "Standard Stroke" on page 28.

Rod boot

—	Without boot
J	Nylon tarpaulin (one end)
JJ	Nylon tarpaulin (both ends)
K	Heat resistant tarpaulin (one end)
KK	Heat resistant tarpaulin (both ends)

Rod

—	Single rod
W	Double rod

Auto switch

—	Without auto switch

∗ For applicable auto switch model, refer to the below table.

Number of auto switches

—	2 pcs.
S	1 pc.
3	3 pcs.
n	"n" pcs.

Made to Order
Refer to the page 28 for details.

Applicable Auto Switches/Tie-rod Mounting

Type	Special function	Electrical entry	Indicator light	Wiring (Output)	Load voltage DC		Load voltage AC	Auto switch model: Tie-rod mounting	Auto switch model: Band mounting	Lead wire length (m): 0.5 (—)	1 (M)	3 (L)	5 (Z)	Pre-wired connector	Applicable load	
Solid state switch	—	Grommet	Yes	3-wire (NPN)	24 V	5 V, 12 V	—	**M9N**	—	●	●	●	○	○	IC	Relay, PLC
				3-wire (PNP)				**M9P**	—	●	●	●	○	○		
				2-wire		12 V		**M9B**	—	●	●	●	○	○	—	
					—	—	100 V, 200 V	**J51**	—	●	—	●	○	—		
		Terminal conduit		3-wire (NPN)	24 V	5 V, 12 V	—	—	**G39**	—	—	—	—	—	IC	
				2-wire		12 V		—	**K39**	—	—	—	—	—	—	
	Diagnosis indication (2-colour)	Grommet		3-wire (NPN)		5 V, 12 V		**M9NW**	—	●	●	●	○	○	IC	
				3-wire (PNP)				**M9PW**	—	●	●	●	○	○		
				2-wire		12 V		**M9BW**	—	●	●	●	○	○	—	
	Water resistant (2-colour)			3-wire (NPN)		5 V, 12 V		**M9NA**∗∗	—	○	○	●	○	○	IC	
				3-wire (PNP)				**M9PA**∗∗	—	○	○	●	○	○		
				2-wire		12 V		**M9BA**∗∗	—	○	○	●	○	○	—	
	Diagnosis output (2-colour)			4-wire (NPN)		5 V, 12 V		**F59F**	—	●	—	●	○	○	IC	
	Strong magnetic field resistant (2-colour)			2-wire (Non-polar type)		—		**P4DW**	—	—	—	●	●	○	—	
Reed switch	—	Grommet	Yes	3-wire (Equiv. to NPN)	—	5 V	—	**A96**	—	●	—	●	—	—	IC	—
			None	2-wire	24 V	12 V	100 V	**A93**	—	●	—	●	—	—	—	Relay, PLC
			None				100 V or less	**A90**	—	●	—	●	—	—	IC	
			None				200 V or less	**A64**	—	●	—	●	—	—	—	
		Terminal conduit	Yes				—	—	**A33**	—	—	—	—	—	—	PLC
							100 V, 200 V	—	**A34**	—	—	—	—	—		
		DIN						—	**A44**	—	—	—	—	—		Relay, PLC
	Diagnosis indication (2-colour)	Grommet				—	—	**A59W**	—	●	—	●	—	—		

∗ Lead wire length symbols: 0.5 m ····· — (Example) M9NW
1 m ····· M (Example) M9NWM
3 m ····· L (Example) M9NWL
5 m ····· Z (Example) M9NWZ

∗ Solid state switches marked with "○" are produced upon receipt of order.

∗ Since there are other applicable auto switches than listed, refer to the auto switch guide.
∗ For details about auto switches with pre-wired connector, refer to the auto switch guide.
∗ D-A9□, M9□, M9□W, M9□AL are shipped together, (but not assembled).
(Switch mounting bracket is only assembled at the time of shipment.)
∗∗ Water resistant type auto switches can be mounted on the above models, but in such case SMC cannot guarantee water resistance.
Consult with SMC regarding water resistant types with the above model numbers.

Accessories

Cylinder Mounting Accessories

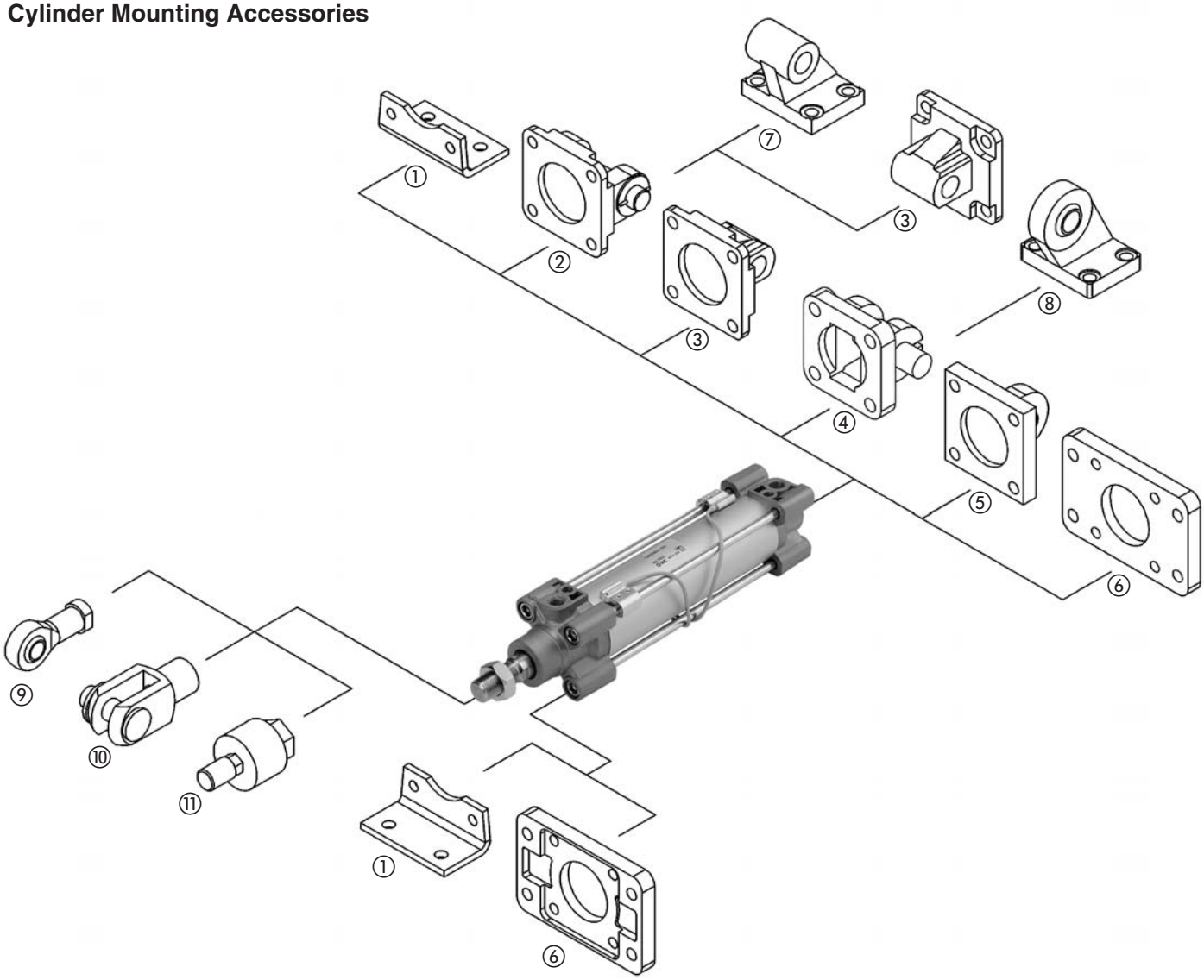

Bore size (mm)	① Foot (Supplied with two pieces and 4 screws)	② Female head end clevis (Corresponds to E accessory) (Supplied with bolt, safety device and 4 screws)	③ Male head end clevis (Supplied with 4 screws)	④ Female head end clevis (for ES accessory) (Supplied with bolt, safety device and 4 screws)	⑤ Male head end clevis with ball joint (Supplied with 4 screws)	⑥ Rod/Head end flange (Supplied with 4 screws)	⑦ Angled head end clevis	⑧ Angled head end clevis with ball joint	⑨ Piston rod ball joint (ISO 8139)	⑩ Rod clevis (ISO 8140) (Supplied with bolt and safety device)	⑪ Floating joint
32	L5032	D5032	C5032	DS5032	CS5032	F5032	E5032	ES5032	KJ10D	GKM10-20	JA30-10-125
40	L5040	D5040	C5040	DS5040	CS5040	F5040	E5040	ES5040	KJ12D	GKM12-24	JA40-12-125
50	L5050	D5050	C5050	DS5050	CS5050	F5050	E5050	ES5050	KJ16D	GKM16-32	JA50-16-150
63	L5063	D5063	C5063	DS5063	CS5063	F5063	E5063	ES5063	KJ16D	GKM16-32	JA50-16-150
80	L5080	D5080	C5080	DS5080	CS5080	F5080	E5080	ES5080	KJ20D	GKM20-40	JAH50-20-150
100	L5100	D5100	C5100	DS5100	CS5100	F5100	E5100	ES5100	KJ20D	GKM20-40	JAH50-20-150
125	L5125	D5125	C5125	DS5125	CS5125	F5125	E5125	ES5125	KJ27D	GKM30-54	JA125-27-200

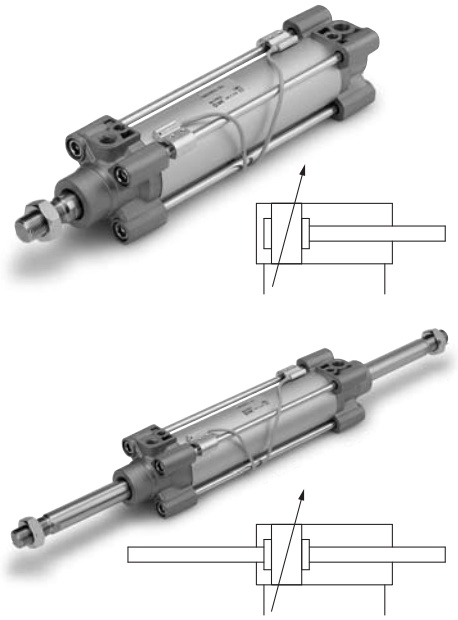

Specifications

Bore size (mm)	32	40	50	63	80	100	125
Action	Double acting						
Fluid	Air						
Proof pressure	1.5 MPa						
Max. operating pressure	1.0 MPa						
Min. operating pressure	0.05 MPa						
Ambient and fluid temperature	Without auto switch: –20 to 70°C* With auto switch: –10 to 60°C*						
Lubrication	Not required (Non-lube)						
Operating piston speed	50 to 1000 mm/s						50 to 700 mm/s
Allowable stroke tolerance	Up to 250 st: $^{+1.0}_{0}$, 251 to 1000 st: $^{+1.4}_{0}$, 1001 to 1500 st: $^{+1.8}_{0}$, 1501 to 2000 st: $^{+2.2}_{0}$						
Cushion	Both ends (Air cushion)						
Port size	G 1/8	G 1/4	G 1/4	G 3/8	G 3/8	G 1/2	G 1/2
Mounting	Basic, Axial foot, Rod end flange, Head end flange, Single clevis, Double clevis, Centre trunnion						

∗ No freezing

Standard Stroke

Bore size (mm)	Standard stroke (mm)	Max. stroke*	
		Single rod	Double rod
32	25, 50, 80, 100, 125, 160, 200, 250, 320, 400, 500	1000	1000
40	25, 50, 80, 100, 125, 160, 200, 250, 320, 400, 500	1900	
50	25, 50, 80, 100, 125, 160, 200, 250, 320, 400, 500, 600		
63	25, 50, 80, 100, 125, 160, 200, 250, 320, 400, 500, 600		
80	25, 50, 80, 100, 125, 160, 200, 250, 320, 400, 500, 600, 700, 800		
100	25, 50, 80, 100, 125, 160, 200, 250, 320, 400, 500, 600, 700, 800		
125	—	2000	

Intermediate strokes are available.
∗ Please consult with SMC for longer strokes.
∗∗ ø125 and Double rod are produced upon receipt of order.

Accessories

Mounting		Basic	Foot	Rod end flange	Head end flange	Single clevis	Double clevis	Centre trunnion
Standard	Rod end nut	●	●	●	●	●	●	●
	Clevis pin	—	—	—	—	—	●	—
Option	Piston rod ball joint	●	●	●	●	●	●	●
	Rod clevis	●	●	●	●	●	●	●
	Rod boot	●	●	●	●	●	●	●

∗ Please do not use a piston rod ball joint (or floating joint) together with a head end clevis with a ball joint (or angled head end clevis with a ball joint).

X option combinations available to order

Symbol	-XA□	-XC14	-XB6 Note 1)	-XC7	-XC22
-XA□					
-XC14	●				
-XB6 Note 1)	●	● Note 2)			
-XC7	●	X	●		
-XC22	●	● Note 2)	—	●	
-XC68	●	● Note 2)	●	●	●

●: Combination possible to produce.
X: Combination possible to produce but contact with SMC.
—: Combination not produced.
Note 1) Only for without magnet type.
Note 2) If XC14A or XC14B are required, the X combination is considered as Standard.
If you want to order a combination of non Simple Special options, just add the X options by alphabetical order at the end of the part number, for example: XC7C22 or XC14AC68.

Minimum Stroke for Auto Switch Mounting

Refer to page 48 for “Minimum Stroke for Auto Switch Mounting”.

Made to Order

Made to Order Specifications

(For details, refer to pages 59 to 64.)

Symbol	Specifications
-XA□	Change of rod end shape
-XC14	Change of trunnion bracket mounting position
-XB6	Heat resistant cylinder (150°C)
-XB7	Cold resistant cylinder
-XC4	With heavy duty scraper
-XC7	Tie rod, cushion valve, tie rod nut, etc. made of stainless steel
-XC10	Dual stroke cylinder/Double rod
-XC11	Dual stroke cylinder/Single rod
-XC22	Fluororubber seals
-XC35	With coil scraper
-XC68	Made of stainless steel (With hard chronium plated piston rod)

Theoretical Output

OUT IN

(N)

Bore size (mm)	Rod diameter (mm)	Operating direction	Piston area (mm^2)	Operating pressure (MPa)								
				0.2	0.3	0.4	0.5	0.6	0.7	0.8	0.9	1.0
32	12	OUT	804	161	241	322	402	482	563	643	724	804
		IN	691	138	207	276	346	415	484	553	622	691
40	16	OUT	1257	251	377	503	629	754	880	1006	1131	1257
		IN	1056	211	317	422	528	634	739	845	950	1056
50	20	OUT	1963	393	589	785	982	1178	1374	1570	1767	1963
		IN	1649	330	495	660	825	989	1154	1319	1484	1649
63	20	OUT	3117	623	935	1247	1559	1870	2182	2494	2805	3117
		IN	2803	561	841	1121	1402	1682	1962	2242	2523	2803
80	25	OUT	5027	1005	1508	2011	2514	3016	3519	4022	4524	5027
		IN	4536	907	1361	1814	2268	2722	3175	3629	4082	4536
100	25	OUT	7854	1571	2356	3142	3927	4712	5498	6283	7068	7854
		IN	7363	1473	2209	2945	3682	4418	5154	5890	6627	7363
125	32	OUT	12272	2454	3682	4909	6136	7363	8590	9817	11045	12272
		IN	11468	2294	3440	4587	5734	6881	8027	9174	10321	11468

Note) Theoretical out put (N) = Pressure (MPa) x Piston area (mm^2)

Weight (single rod)

(kg)

Bore size (mm)		**32**	**40**	**50**	**63**	**80**	**100**	**125**
Basic Weight	Basic	0.53	0.83	1.33	1.74	2.77	3.69	6.70
	Foot	0.16	0.20	0.38	0.46	0.89	1.09	2.60
	Flange	0.20	0.23	0.47	0.58	1.30	1.81	4.10
	Single clevis	0.16	0.23	0.37	0.60	1.07	1.73	4.15
	Double clevis	0.20	0.32	0.45	0.71	1.28	2.11	4.25
	Trunnion	0.71	1.10	1.73	2.48	4.25	5.95	2.98
Additional mass per each 50 mm stroke	All mounting brackets	0.11	0.16	0.24	0.26	0.40	0.44	0.71
Accessory	Single rod clevis	0.07	0.11	0.22		0.40		1.20
	Double rod clevis	0.09	0.15	0.34		0.69		1.84

Calculation: (Example) C96SD40-100
- Basic weight ····· 0.83 (kg) (Basic, ø40) • Mounting ····· 0.32 (kg) (Double clevis)
- Additional weight ···· 0.16 (kg/50 st)
- Cylinder stroke ····· 100 (st)

0.83 + 0.16 x 100 50 + 0.32 = 1.47kg

Allowable Kinetic Energy

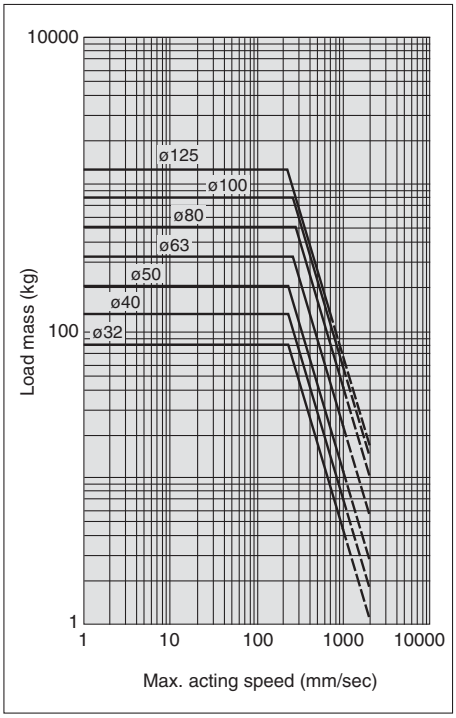

Example: Load limit at rod end when air cylinder ø63 is actuated with max. actuating speed 500 mm/s. See the intersection of lateral axis 500 mm/s and ø63 line, and extend the intersection to left. Thus, the allowable load is 80 kg.

Construction

[First angle projection]

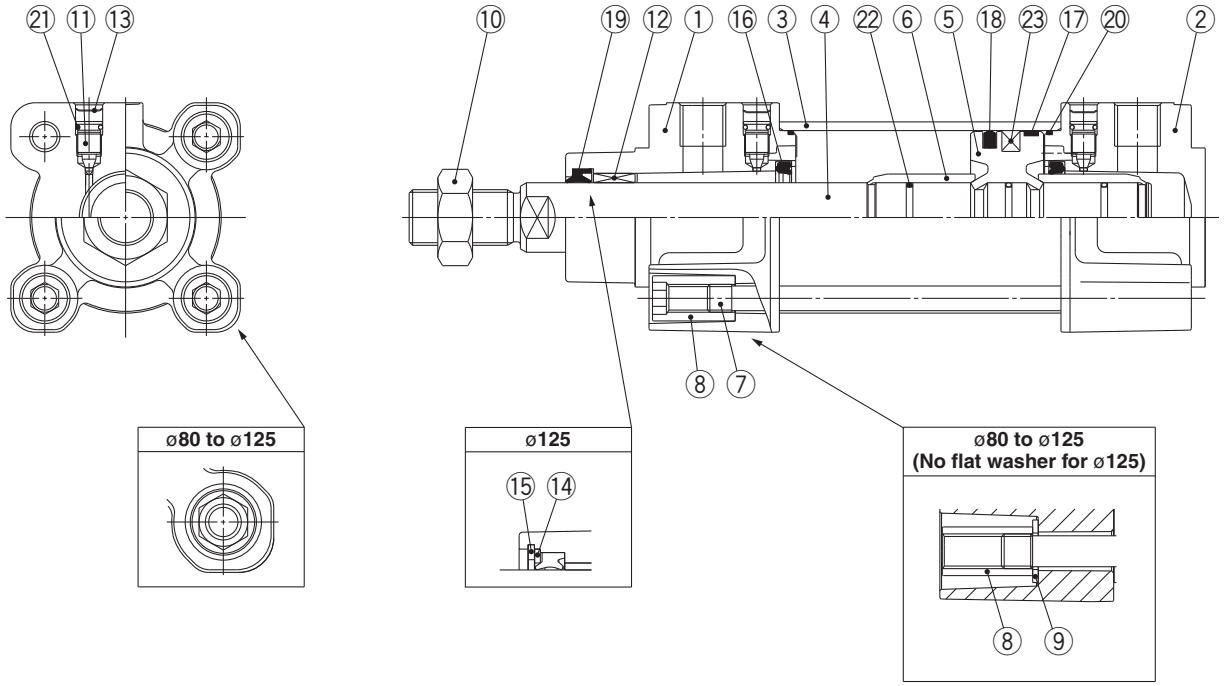

Component Parts

No.	Description	Material	Note
1	**Rod cover**	Aluminium die-casted	
2	**Head cover**	Aluminium die-casted	
3	**Cylinder tube**	Aluminium alloy	
4	**Piston rod**	Carbon steel	
5	**Piston**	Aluminium alloy	
6	**Cushion ring**	Aluminium alloy	
7	**Tie-rod**	Carbon steel	
8	**Tie-rod nut**	Steel	
9	**Flat washer**	Steel	ø80 and ø100
10	**Rod end nut**	Steel	
11	**Cushion valve**	Steel wire	
12	**Bushing**	Bearing alloy	
13	**Snap ring**	Steel for spring	ø40 to ø125
14	**Rod seal holder**	Stainless steel	ø125
15	**Snap ring**	Steel for spring	ø125
16	**Cushion seal**	Urethane rubber	
17	**Wearing**	Resin	
18	**Piston seal**	NBR	
19	**Rod seal**	NBR	
20	**Cylinder tube gasket**	NBR	
21	**Cushion valve seal**	NBR	
22	**Piston gasket**	NBR	
23	**Magnet**		

Replacement Parts: Seal Kit/Single rod

Bore size (mm)	Kit no.	Contents
32	CS95-32	Kits include items ⑯ to ⑳.
40	CS95-40	
50	CS95-50	
63	CS95-63	
80	CS95-80	
100	CS96-100	
125	CS96-125	

∗ Seal kits consist of items ⑯ to ⑳ contained in one kit, and can be orderd using the number for each respective tube bore size.

Seal Kit/Double rod

Bore size (mm)	Kit no.	Contents
32	CS95W-32	Kits include items ⑯ and ⑱ to ⑳
40	CS95W-40	
50	CS95W-50	
63	CS95W-63	
80	CS95W-80	
100	CS96W-100	
125	CS96W-125	

Dimensions: Without Mounting Bracket

[First angle projection]

C96S(D)B Bore size – Stroke

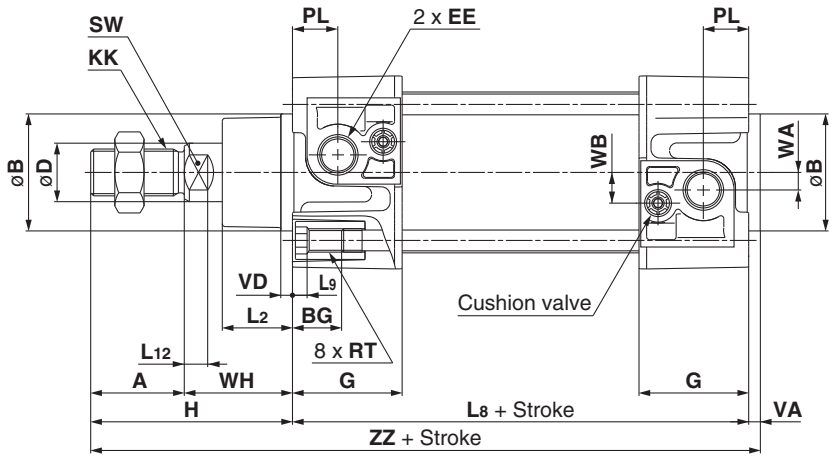

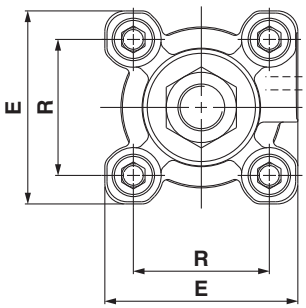

With rod boot

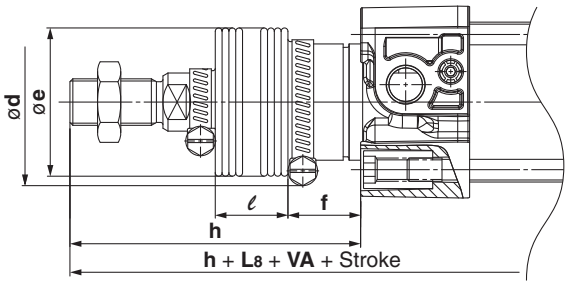

Bore size (mm)	Stroke Range(mm)		A	øB d11	øD	EE	PL	RT	L12	KK	SW	G	BG	L8	VD	VA	WA	WB	WH	ZZ	E	R
	Without rod boot	With rod boot																				
32	to 1000	to 1000	22	30	12	G 1/8	13	M6 x 1	6	M10 x 1.25	10	32	16	94	4	4	4	7	26	146	47	32.5
40	to 1900	to 1000	24	35	16	G 1/4	14	M6 x 1	6.5	M12 x 1.25	13	37.5	16	105	4	4	5	9	30	163	54	38
50	to 1900	to 1000	32	40	20	G 1/4	15.5	M8 x 1.25	8	M16 x 1.5	17	37.5	16	106	4	4	6	10.5	37	179	66	46.5
63	to 1900	to 1000	32	45	20	G 3/8	16.5	M8 x 1.25	8	M16 x 1.5	17	45	16	121	4	4	9	12	37	194	77	56.5
80	to 1900	to 1000	40	45	25	G 3/8	19	M10 x 1.5	10	M20 x 1.5	22	45	17	128	4	4	11.5	14	46	218	99	72
100	to 1900*	to 1000*	40	55	25	G 1/2	19	M10 x 1.5	10	M20 x 1.5	22	50	17	138	4	4	17	15	51	233	118	89
125	to 2000*	to 1000*	54	60	32	G 1/2	19	M12 x 1.75	13	M27 x 2	27	58	20	160	6	6	17	15	65	285	144	110

* Minimum stroke for trunnion mounting are below. Tube I.D. 32 to 80: 0mm, Tube I.D. 100: 5mm, Tube I.D. 125: 10mm

Bore size (mm)	L2	L9	H	ød	øe	f	ℓ												h										
							1 to 50	51 to 100	101 to 150	151 to 200	201 to 300	301 to 400	401 to 500	501 to 600	601 to 700	701 to 800	801 to 900	901 to 1000	1 to 50	51 to 100	101 to 150	151 to 200	201 to 300	301 to 400	401 to 500	501 to 600	601 to 700	701 to 800	801 to 900	901 to 1000
32	15	4	48	54	36	23	12.5	25	37.5	50	75	100	125	150	175	200	225	250	75	88	100	113	138	163	188	213	238	263	288	313
40	17	4	54	54	36	23	12.5	25	37.5	50	75	100	125	150	175	200	225	250	75	88	100	113	138	163	188	213	238	263	288	313
50	24	5	69	64	51	25	12.5	25	37.5	50	75	100	125	150	175	200	225	250	87	100	112	125	150	175	200	225	250	275	300	325
63	24	5	69	64	51	25	12.5	25	37.5	50	75	100	125	150	175	200	225	250	87	100	112	125	150	175	200	225	250	275	300	325
80	30	—	86	68	56	30	12.5	25	37.5	50	75	100	125	150	175	200	225	250	103	116	128	141	166	191	216	241	266	291	316	341
100	32	—	91	76	56	32	12.5	25	37.5	50	75	100	125	150	175	200	225	250	103	116	128	141	166	191	216	241	266	291	316	341
125	40	—	119	82	75	40	10	20	30	40	60	80	100	120	140	160	180	200	130	140	150	160	180	200	220	240	260	280	300	320

Dimensions: Without Mounting Bracket

[First angle projection]

C96S(D)B Bore size – Stroke W

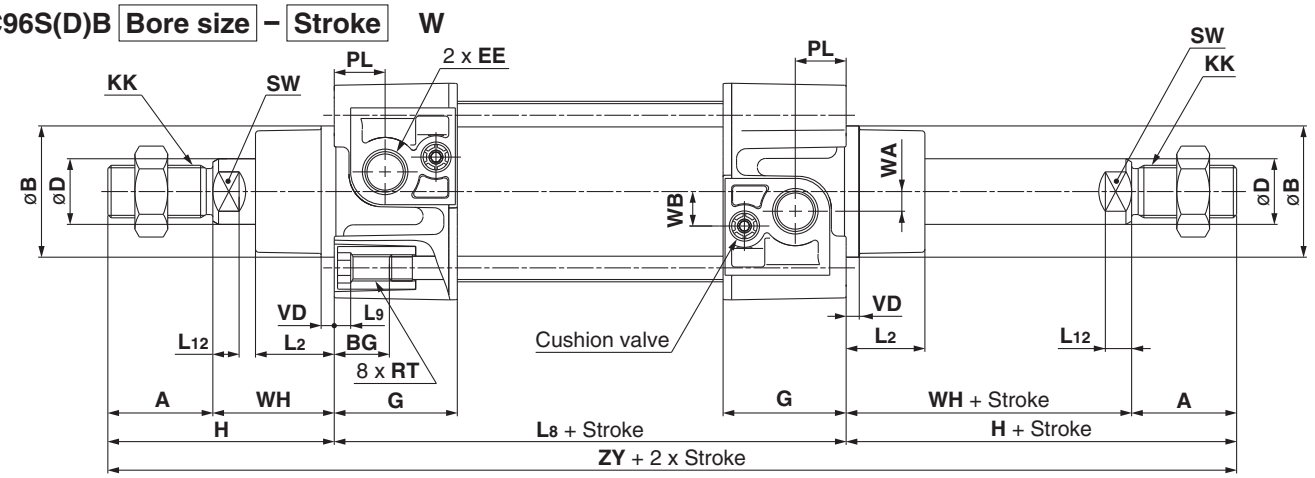

With rod boot at one end

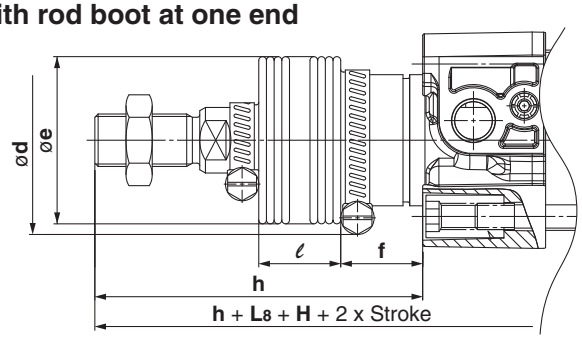

With rod boot at both ends

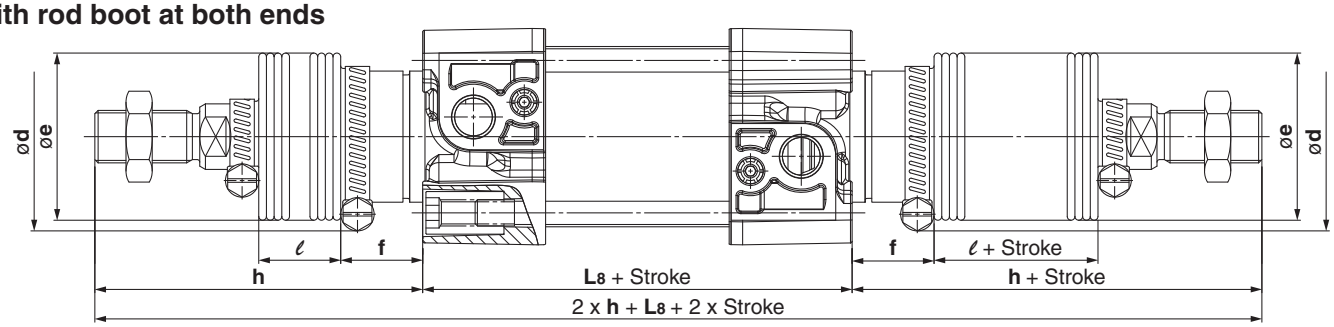

Bore size (mm)	Stroke Range (mm)	A	øB d11	øD	EE	PL	RT	L12	KK	SW	G	BG	L8	VD	WA	WB	WH	ZY	L2	L9
32	to 1000	22	30	12	G 1/8	13	M6 x 1	6	M10 x 1.25	10	32	16	94	4	4	7	26	190	15	4
40	to 1000	24	35	16	G 1/4	14	M6 x 1	6.5	M12 x 1.25	13	37.5	16	105	4	5	9	30	213	17	4
50	to 1000	32	40	20	G 1/4	15.5	M8 x 1.25	8	M16 x 1.5	17	37.5	16	106	4	6	10.5	37	244	24	5
63	to 1000	32	45	20	G 3/8	16.5	M8 x 1.25	8	M16 x 1.5	17	45	16	121	4	9	12	37	259	24	5
80	to 1000	40	45	25	G 3/8	19	M10 x 1.5	10	M20 x 1.5	22	45	17	128	4	11.5	14	46	300	30	—
100	to 1000*	40	55	25	G 1/2	19	M10 x 1.5	10	M20 x 1.5	22	50	17	138	4	17	15	51	320	32	—
125	to 1000*	54	60	32	G 1/2	19	M12 x 1.75	13	M27 x 2	27	58	20	160	6	17	15	65	398	40	—

* Minimum stroke for trunnion mounting are below. Tube I.D. 32 to 80:0mm, Tube I.D. 100:5mm, Tube I.D. 125:10mm

Bore size (mm)	H	ød	øe	f	ℓ												h											
					1 to 50	51 to 100	101 to 150	151 to 200	201 to 300	301 to 400	401 to 500	501 to 600	601 to 700	701 to 800	801 to 900	901 to 1000	1 to 50	51 to 100	101 to 150	151 to 200	201 to 300	301 to 400	401 to 500	501 to 600	601 to 700	701 to 800	801 to 900	901 to 1000
32	48	54	36	23	12.5	25	37.5	50	75	100	125	150	175	200	225	250	75	88	100	113	138	163	188	213	238	263	288	313
40	54	54	36	23	12.5	25	37.5	50	75	100	125	150	175	200	225	250	75	88	100	113	138	163	188	213	238	263	288	313
50	69	64	51	25	12.5	25	37.5	50	75	100	125	150	175	200	225	250	87	100	112	125	150	175	200	225	250	275	300	325
63	69	64	51	25	12.5	25	37.5	50	75	100	125	150	175	200	225	250	87	100	112	125	150	175	200	225	250	275	300	325
80	86	68	56	30	12.5	25	37.5	50	75	100	125	150	175	200	225	250	103	116	128	141	166	191	216	241	266	291	316	341
100	91	76	56	32	12.5	25	37.5	50	75	100	125	150	175	200	225	250	103	116	128	141	166	191	216	241	266	291	316	341
125	119	82	75	40	10	20	30	40	60	80	100	120	140	160	180	200	130	140	150	160	180	200	220	240	260	280	300	320

Dimensions: Cylinder Mounting Accessories

[First angle projection]

Foot (L)

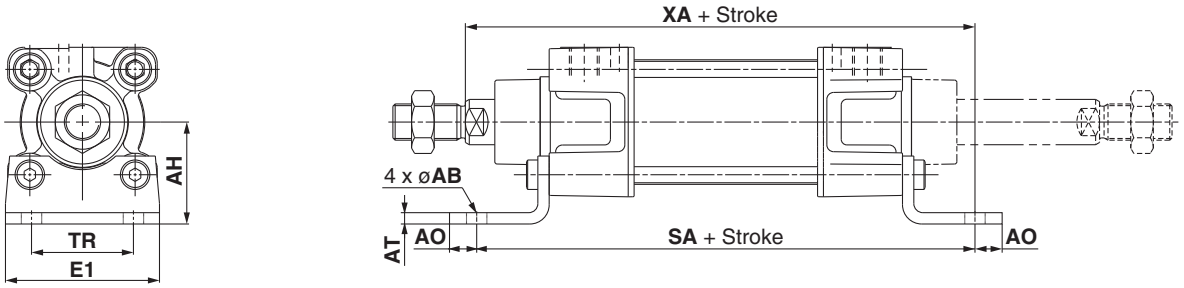

Centre trunnion (T)

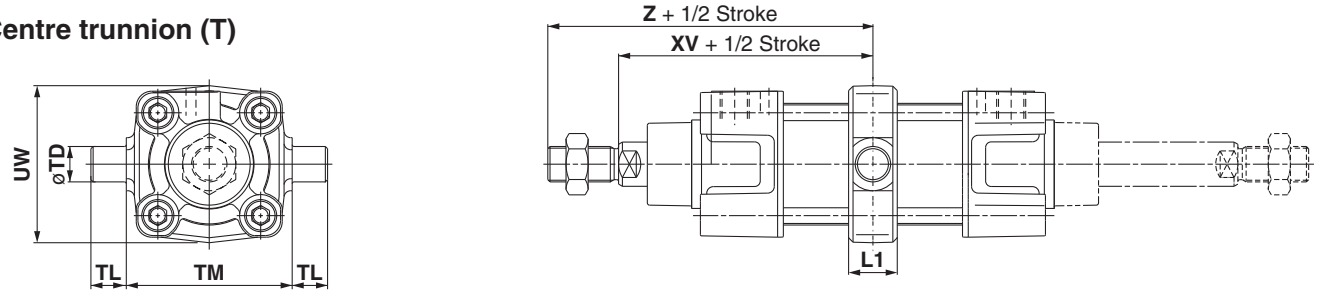

Flange (F/G)

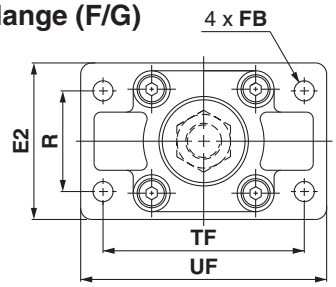

Head end mounting (G)

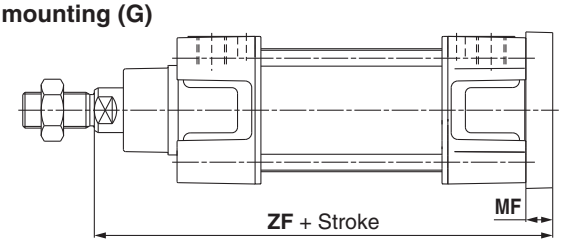

Rod end mounting (F)

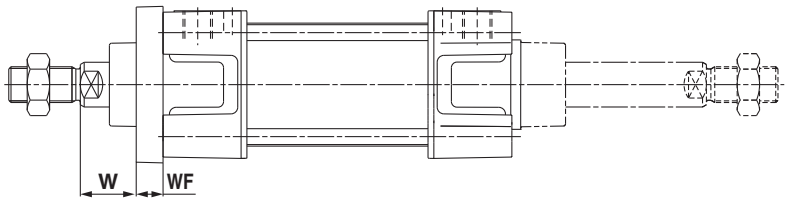

Head end single clevis (C)

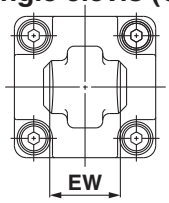

Head end double clevis (D)

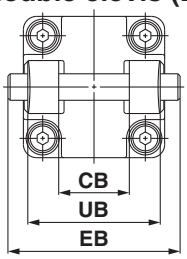

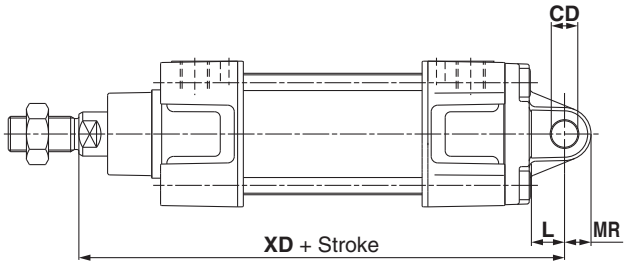

Bore size (mm)	E1	TR	AH	AO	AT	øAB	SA	XA	TM	TL	øTD e8	UW	L1	XV	Z	R	TF	øFB	E2	UF	W	MF	ZF	UB h14	CB H14	EW	øCD H9	L	MR	XD	EB
32	48	32	32	10	4.5	7	142	144	50	12	12	49	17	73	95	32	64	7	50	79	16	10	130	45	26	26-0.2/-0.6	10	12	9.5	142	65
40	55	36	36	11	4.5	10	161	163	63	16	16	58	22	82.5	106.5	36	72	9	55	90	20	10	145	52	28	28-0.2/-0.6	12	15	12	160	75
50	68	45	45	12	5.5	10	170	175	75	16	16	71	22	90	122	45	90	9	70	110	25	12	155	60	32	32-0.2/-0.6	12	15	12	170	80
63	80	50	50	12	5.5	10	185	190	90	20	20	87	28	97.5	129.5	50	100	9	80	120	25	12	170	70	40	40-0.2/-0.6	16	20	16	190	90
80	100	63	63	14	6.5	12	210	215	110	20	20	110	34	110	150	63	126	12	100	153	30	16	190	90	50	50-0.2/-0.6	16	20	16	210	110
100	120	75	71	16	6.5	14.5	220	230	132	25	25	136	40	120	160	75	150	14	120	178	35	16	205	110	60	60-0.2/-0.6	20	25	20	230	140
125	Max. 157	90	90	Max. 25	8	16	250	270	160	25	25	Max. 160	50	145	199	90	180	16	Max. 157	Max. 224	45	20	245	130	70	70-0.5/-1.2	25	Min. 30	Max. 26	275	Max. 157

Dimensions: Cylinder Mounting Accessories (C/D/E/CS)

[First angle projection]

Mounting (C)

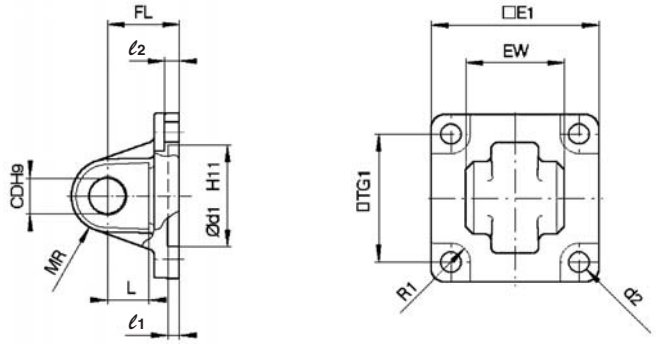

Mounting (D)

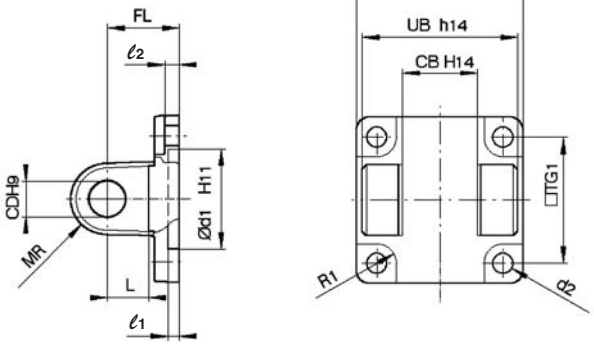

Bore size (mm)	E1	EW	TG1	FL	ℓ1	L	ℓ2	ød1	øCD	MR	ød2	R1	E2	UB	CB
32	45	$26^{-0.2}_{-0.6}$	32.5	22	5	12	5.5	30	10	9.5	6.6	6.5	48	45	26
40	51	$28^{-0.2}_{-0.6}$	38	25	5	15	5.5	35	12	12	6.6	6.5	56	52	28
50	64	$32^{-0.2}_{-0.6}$	46.5	27	5	15	6.5	40	12	12	9	8.5	64	60	32
63	74	$40^{-0.2}_{-0.6}$	56.5	32	5	20	6.5	45	16	16	9	8.5	75	70	40
80	94	$50^{-0.2}_{-0.6}$	72	36	5	20	10	45	16	16	11	11	95	90	50
100	113	$60^{-0.2}_{-0.6}$	89	41	5	25	10	55	20	20	11	12	115	110	60
125	Max. 157	$70^{-0.5}_{-1.2}$	110	50	7	30	10	60	25	26	13.5	10	Max. 157	130	70

Mounting (E)

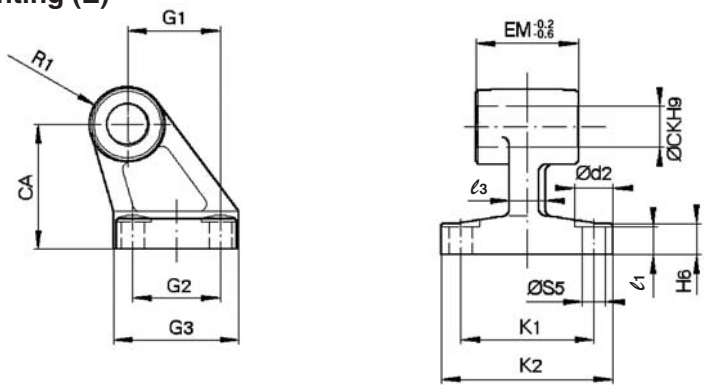

Bore size (mm)	ød2	øCK	øS5	K1	K2 max.	ℓ3 max.	G1	ℓ1	G2	EM	G3 max.	CA	H6	R1
32	11	10	6.6	38	51	10	21	7	18	$26^{-0.2}_{-0.6}$	31	32	8	10
40	11	12	6.6	41	54	10	24	9	22	$28^{-0.2}_{-0.6}$	35	36	10	11
50	15	12	9	50	65	12	33	11	30	$32^{-0.2}_{-0.6}$	45	45	12	12
63	15	16	9	52	67	14	37	11	35	$40^{-0.2}_{-0.6}$	50	50	12	15
80	18	16	11	66	86	18	47	12.5	40	$50^{-0.2}_{-0.6}$	60	63	14	15
100	18	20	11	76	96	20	55	13.5	50	$60^{-0.2}_{-0.6}$	70	71	15	19
125	20	25	14	94	124	30	70	17	60	$70^{-0.5}_{-1.5}$	90	90	20	22.5

Mounting (CS): Head end clevis with ball joint

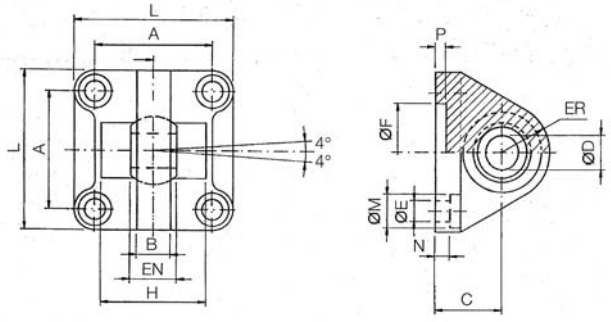

Bore size (mm)	A	B max.	C	øD H7	EN 0 −0.1	ER max.	øF H11	øE	L	øM	N	P	H 0.5
32	32.5	10.5	22	10	14	15	30	6.6	45	10.5	5.5	5	—
40	38	12	25	12	16	18	35	6.6	55	11	5.5	5	—
50	46.5	15	27	16	21	20	40	9	65	15	6.5	5	51
63	56.5	15	32	16	21	23	45	9	75	15	6.5	5	—
80	72	18	36	20	25	27	45	11	95	18	10	5	70
100	89	18	41	20	25	30	55	11	115	18	10	5	—
125	110	25	50	30	37	40	60	13.5	140	20	10	7	100

∗ Black colour

Dimensions: Cylinder Mounting Accessories (DS/ES)

[First angle projection]

Mounting (DS)

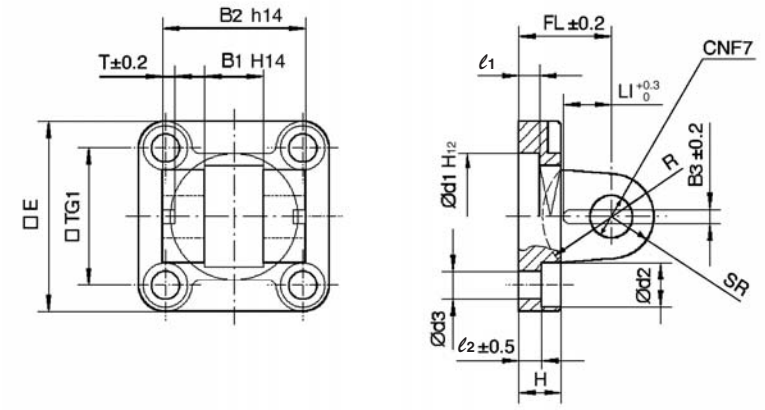

Bore size (mm)	E	B_1	B_2	B_3	L_1	TG_1	T	ℓ_1 min.	ℓ_2	FL	H max.	ød1	ød2	ød3	øCN	SR max.	R
32	45	14	34	3.3	11.5	32.5	3	5	5.5	22	10	30	10.5	6.6	10	11	17
40	55	16	40	4.3	12	38	4	5	5.5	25	10	35	11	6.6	12	13	20
50	65	21	45	4.3	14	46.5	4	5	6.5	27	12	40	15	9	16	18	22
63	75	21	51	4.3	14	56.5	4	5	6.5	32	12	45	15	9	16	18	25
80	95	25	65	4.3	16	72	4	5	10	36	16	45	18	11	20	22	30
100	115	25	75	6.3	16	89	4	5	10	41	16	55	18	11	20	22	32
125	140	37	97	6.3	24	110	6	7	10	50	20	60	20	13.5	30	30	42

∗ Black colour

Mounting (ES)

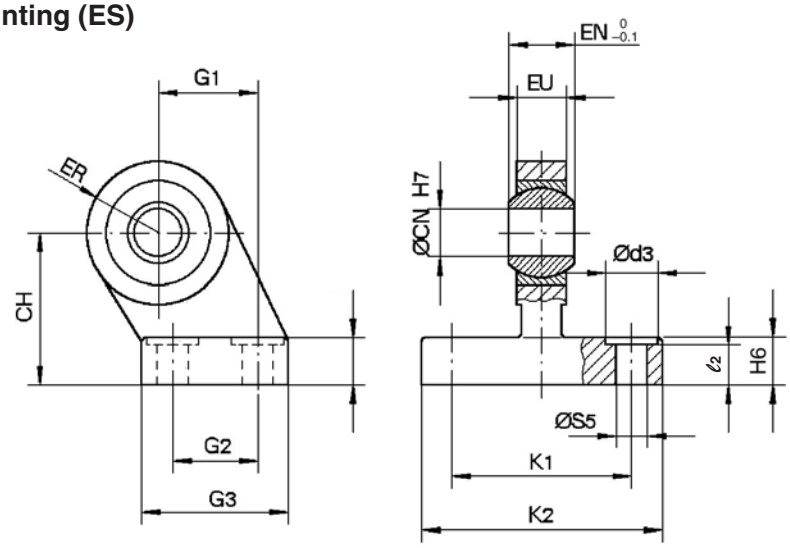

Bore size (mm)	ød3	øCN	øS5	K1	K2 max.	ℓ2	G1	G2	G3 max.	EN	EU	CH	H6	ER max.
32	11	10	6.6	38	51	8.5	21	18	31	14	10.5	32	10	15
40	11	12	6.6	41	54	8.5	24	22	35	16	12	36	10	18
50	15	16	9	50	65	10.5	33	30	45	21	15	45	12	20
63	15	16	9	52	67	10.5	37	35	50	21	15	50	12	23
80	18	20	11	66	86	11.5	47	40	60	25	18	63	14	27
100	18	20	11	76	96	12.5	55	50	70	25	18	71	15	30
125	20	30	13.5	94	124	17	70	60	90	37	25	90	20	40

∗ Black colour

Dimensions: Piston Rod Mounting Accessories

[First angle projection]

Floating Joint JA

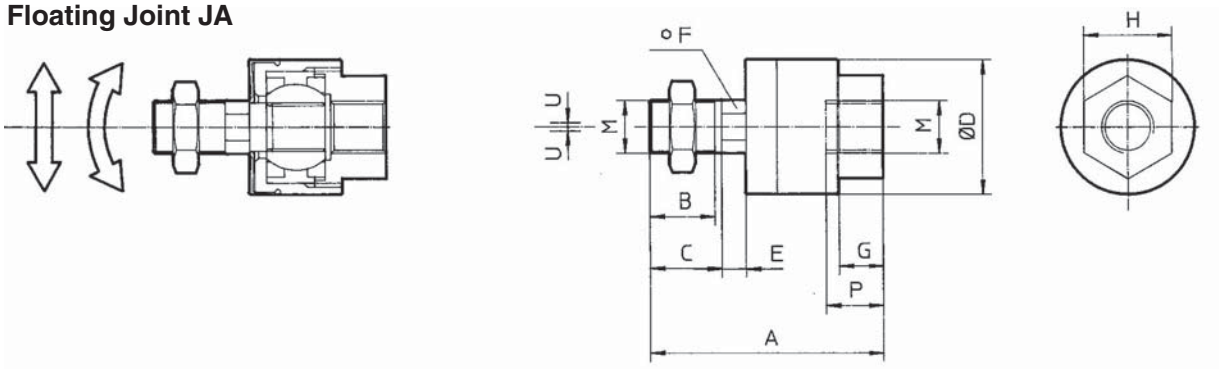

Bore size (mm)	M	Part no.	A	B	C	øD	E	F	G	H	P	U	Load (kN)	Weight (g)	Angle
32	M10 x 1.25	**JA30-10-125**	49.5	19.5	—	24	5	8	8	17	9	0.5	2.5	70	
40	M12 x 1.25	**JA40-12-125**	60	20	—	31	6	11	11	22	13	0.75	4.4	160	
50, 63	M16 x 1.5	**JA50-16-150**	71.5	22	—	41	7.5	14	13.5	27	15	1	11	300	±5°
80, 100	M20 x 1.5	**JAH50-20-150**	101	28	31	59.5	11.5	24	16	32	18	2	18	1080	
125	M27 x 2	**JA125-27-200**	123	34	38	66	13	27	20	41	24	2	28	1500	

∗ Black colour

Rod Clevis GKM (ISO 8140), Supplied with Bolt and Safety Device

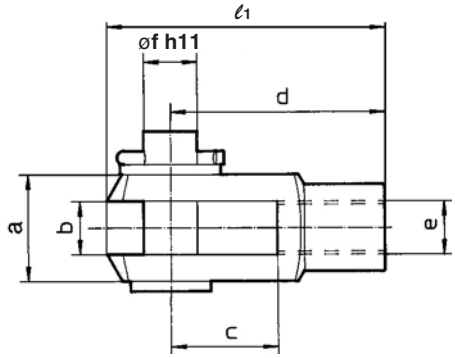

Bore size (mm)	e	Part no.	b	d	øf h11 (Shaft)	øf H9 (Hole)	ℓ1	c min.	a max.
32	M10 x 1.25	**GKM10-20**	$10^{+0.5}_{+0.15}$	40	10	10	52	20	20
40	M12 x 1.25	**GKM12-24**	$12^{+0.5}_{+0.15}$	48	12	12	62	24	24
50, 63	M16 x 1.5	**GKM16-32**	$16^{+0.5}_{+0.15}$	64	16	16	83	32	32
80, 100	M20 x 1.5	**GKM20-40**	$20^{+0.5}_{+0.15}$	80	20	20	105	40	40
125	M27 x 2	**GKM30-54**	$30^{+0.5}_{+0.15}$	110	30	30	148	54	55

Piston Rod Ball Joint KJ (ISO 8139)

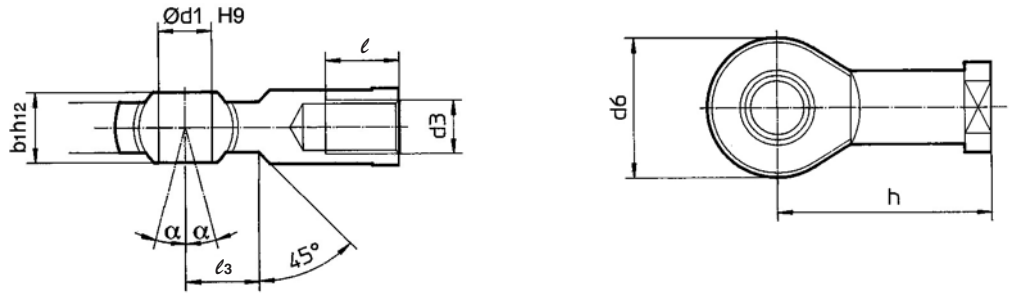

Bore size (mm)	d3	Part no.	ød1 H9	h	d6 max.	b1 h12	ℓ min.	α	ℓ3
32	M10 x 1.25	**KJ10D**	10	43	28	14	20	4°	15
40	M12 x 1.25	**KJ12D**	12	50	32	16	22	4°	17
50, 63	M16 x 1.5	**KJ16D**	16	64	42	21	28	4°	23
80, 100	M20 x 1.5	**KJ20D**	20	77	50	25	33	4°	27
125	M27 x 2	**KJ27D**	30	110	70	37	51	4°	36

ISO Cylinder: Non-rotating Rod Type
Double Acting, Single/Double Rod
Series C96K
ø32, ø40, ø50, ø63, ø80, ø100

How to Order

With auto switch **C96KD B 32 – 100 W – M9BW S**

Built-in magnet

Mounting

B	Basic/Without bracket
L	Axial foot
F	Rod end flange
G	Head end flange
C	Single clevis
D	Double clevis
T	Centre trunnion

Bore size

32	32 mm
40	40 mm
50	50 mm
63	63 mm
80	80 mm
100	100 mm

Stroke (mm)
Refer to "Maximum Stroke" on page 38.

Rod

—	Single rod
W	Double rod

Auto switch

—	Without auto switch

∗ For applicable auto switch model, refer to the below table.

Number of auto switches

—	2 pcs.
S	1 pc.
3	3 pcs.
n	"n" pcs.

Applicable Auto Switches/Tie-rod Mounting

Type	Special function	Electrical entry	Indicator light	Wiring (Output)	Load voltage DC	Load voltage DC	Load voltage AC	Auto switch model Tie-rod mounting	Auto switch model Band mounting	Lead wire length (m) 0.5 (—)	1 (M)	3 (L)	5 (Z)	Pre-wired connector	Applicable load	
Solid state switch	—	Grommet	Yes	3-wire (NPN)	24 V	5 V, 12 V	—	**M9N**	—	●	●	●	○	○	IC	Relay, PLC
				3-wire (PNP)				**M9P**	—	●	●	●	○	○		
				2-wire		12 V		**M9B**	—	●	●	●	○	○	—	
					—	—	100 V, 200 V	**J51**	—	●	—	●	○	—		
		Terminal conduit		3-wire (NPN)	24 V	5 V, 12 V	—	—	**G39**	—	—	—	—	—	IC	
				2-wire		12 V		—	**K39**	—	—	—	—	—	—	
	Diagnosis indication (2-colour)	Grommet		3-wire (NPN)		5 V, 12 V		**M9NW**	—	●	●	●	○	○	IC	
				3-wire (PNP)				**M9PW**	—	●	●	●	○	○		
				2-wire		12 V		**M9BW**	—	●	●	●	○	○	—	
	Water resistant (2-colour)			3-wire (NPN)		5 V, 12 V		**M9NA**∗∗	—	○	○	●	○	○	IC	
				3-wire (PNP)				**M9PA**∗∗	—	○	○	●	○	○		
				2-wire		12 V		**M9BA**∗∗	—	○	○	●	○	○	—	
	Diagnosis output (2-colour)			4-wire (NPN)		5 V, 12 V		**F59F**	—	●	—	●	○	○	IC	
	Strong magnetic field resistant (2-colour)			2-wire (Non-polar type)		—		**P4DW**	—	—	—	●	●	○	—	
Reed switch	—	Grommet	Yes	3-wire (Equiv. to NPN)	—	5 V	—	**A96**	—	●	—	●	—	—	IC	—
			None	2-wire	24 V	12 V	100 V	**A93**	—	●	—	●	—	—	—	Relay, PLC
			None				100 V or less	**A90**	—	●	—	●	—	—	IC	
			None				200 V or less	**A64**	—	●	—	●	—	—	—	
		Terminal conduit	Yes				—	—	**A33**	—	—	—	—	—	—	PLC
		DIN					100 V, 200 V	—	**A34**	—	—	—	—	—		Relay, PLC
								—	**A44**	—	—	—	—	—		
	Diagnosis indication (2-colour)	Grommet				—	—	**A59W**	—	●	—	●	—	—		

∗ Lead wire length symbols: 0.5 m ····· — (Example) M9NW
1 m ····· M (Example) M9NWM
3 m ····· L (Example) M9NWL
5 m ····· Z (Example) M9NWZ

∗ Solid state switches marked with "○" are produced upon receipt of order.

∗ Since there are other applicable auto switches than listed, refer to the auto switch guide.
∗ For details about auto switches with pre-wired connector, refer to the auto switch guide.
∗ D-A9□, M9□, M9□W, M9□AL are shipped together, (but not assembled).
(Switch mounting bracket is only assembled at the time of shipment.)
∗∗ Water resistant type auto switches can be mounted on the above models, but in such case SMC cannot guarantee water resistance.
Consult with SMC regarding water resistant types with the above model numbers.

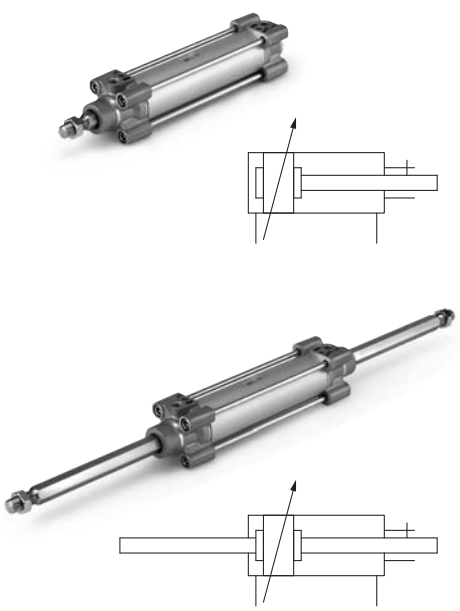

Specifications

Bore size (mm)	32	40	50	63	80	100
Action	Double acting					
Fluid	Air					
Proof pressure	1.5 MPa					
Max. operating pressure	1.0 MPa					
Min. operating pressure	0.05 MPa					
Ambient and fluid temperature	Without auto switch: –20 to 70°C∗ With auto switch: –10 to 60°C∗					
Lubrication	Not required (Non-lube)					
Operating piston speed	50 to 1000 mm/s					
Allowable stroke tolerance	Up to 250 st: $^{+1.0}_{0}$, 251 to 1000 st: $^{+1.4}_{0}$					
Cushion	Both ends (Air cushion)					
Port size	G 1/8	G 1/4	G 1/4	G 3/8	G 3/8	G 1/2
Mounting	Basic, Axial foot, Rod end flange, Head end flange, Single clevis, Double clevis, Centre trunnion					
Non-rotating accuracy	±0.5°		±0.5°		±0.3°	
Allowable rotating torque Nm max.	0.25	0.45	0.64		0.79	

∗ No freezing

Minimum Stroke for Auto Switch Mounting

Refer to page 48 for “Minimum Stroke for Auto Switch Mounting”.

Maximum stroke

Bore size (mm)	Max. stroke∗
32	500
40	500
50	600
63	600
80	800
100	800

Intermediate strokes are available.
∗ Please consult with SMC for longer strokes.

Accessories

Mounting		Basic	Foot	Rod end flange	Head end flange	Single clevis	Double clevis	Centre trunnion
Standard	Rod end nut	●	●	●	●	●	●	●
	Clevis pin	—	—	—	—	—	●	—
Option	Piston rod ball joint	●	●	●	●	●	●	●
	Rod clevis	●	●	●	●	●	●	●
	Rod boot	—	—	—	—	—	—	—

∗ Please do not use a piston rod ball joint (or floating joint) together with a head end clevis with a ball joint (or angled head end clevis with a ball joint).

Construction

[First angle projection]

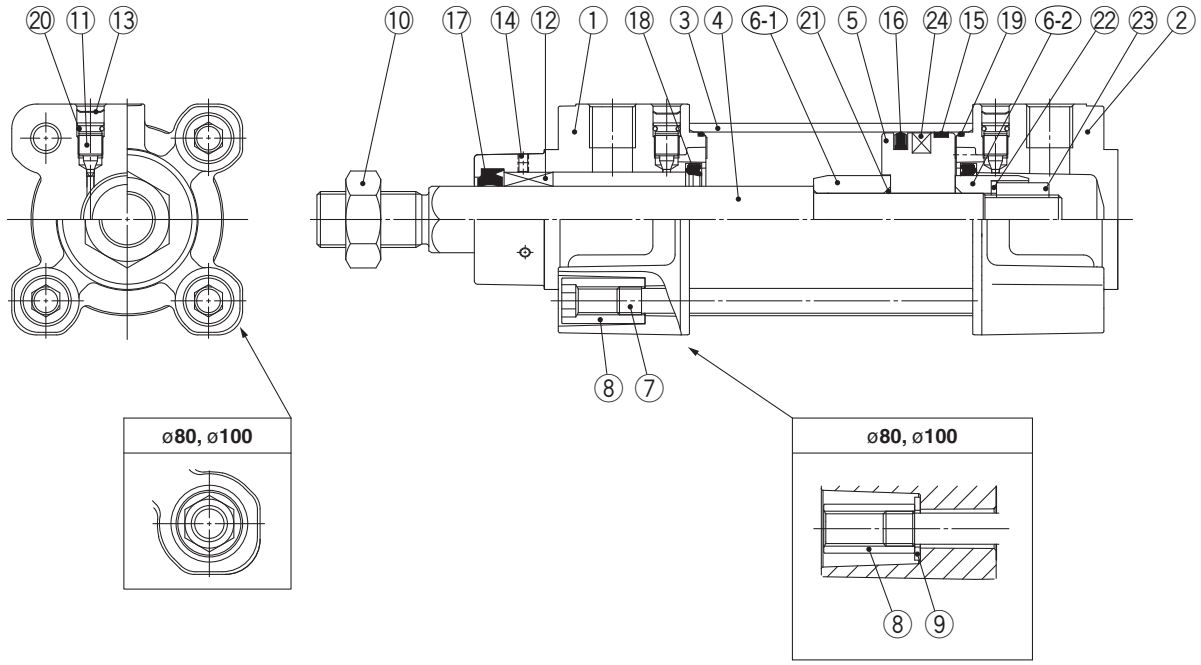

Component Parts

No.	Description	Material	Note
1	**Rod cover**	Aluminium die-casted	
2	**Head cover**	Aluminium die-casted	
3	**Cylinder tube**	Aluminium alloy	
4	**Piston rod**	Stainless steel	
5	**Piston**	Aluminium alloy	
6-1	**Cushion ring**	Steel	
6-2	**Cushion ring**	Steel	
7	**Tie-rod**	Carbon steel	
8	**Tie-rod nut**	Steel	
9	**Flat washer**	Steel	ø80 and ø100
10	**Rod end nut**	Steel	
11	**Cushion valve**	Steel wire	
12	**Non-rotating guide**	Bearing alloy	
13	**Snap ring**	Steel for spring	ø40 to ø100
14	**Set screw**	steel	
15	**Wearing**	Resin	
16	**Piston seal**	NBR	
17	**Rod seal**	NBR	
18	**Cushion seal**	Urethane rubber	
19	**Cylinder tube gasket**	NBR	
20	**Cushion valve seal**	NBR	
21	**Piston gasket**	NBR	
22	**Spring washer**	steel	
23	**Piston nut**	steel	
24	**Magnet**		

Replacement Parts: Seal Kit/Single rod

Bore size (mm)	Kit no.	Contents
32	CK95-32	Kits include items ⑮ to ⑲.
40	CK95-40	
50	CK95-50	
63	CK95-63	
80	CK95-80	
100	CK96-100	

∗ Seal kits consist of items ⑮ to ⑲ contained in one kit, and can be orderd using the number for each respective tube bore size.

Seal Kit/Double rod

Bore size (mm)	Kit no.	Contents
32	CK95W-32	Kits include items ⑯ to ⑲.
40	CK95W-40	
50	CK95W-50	
63	CK95W-63	
80	CK95W-80	
100	CK96W-100	

Dimensions: Without Mounting Bracket

[First angle projection]

C96K(D)B Bore size – Stroke

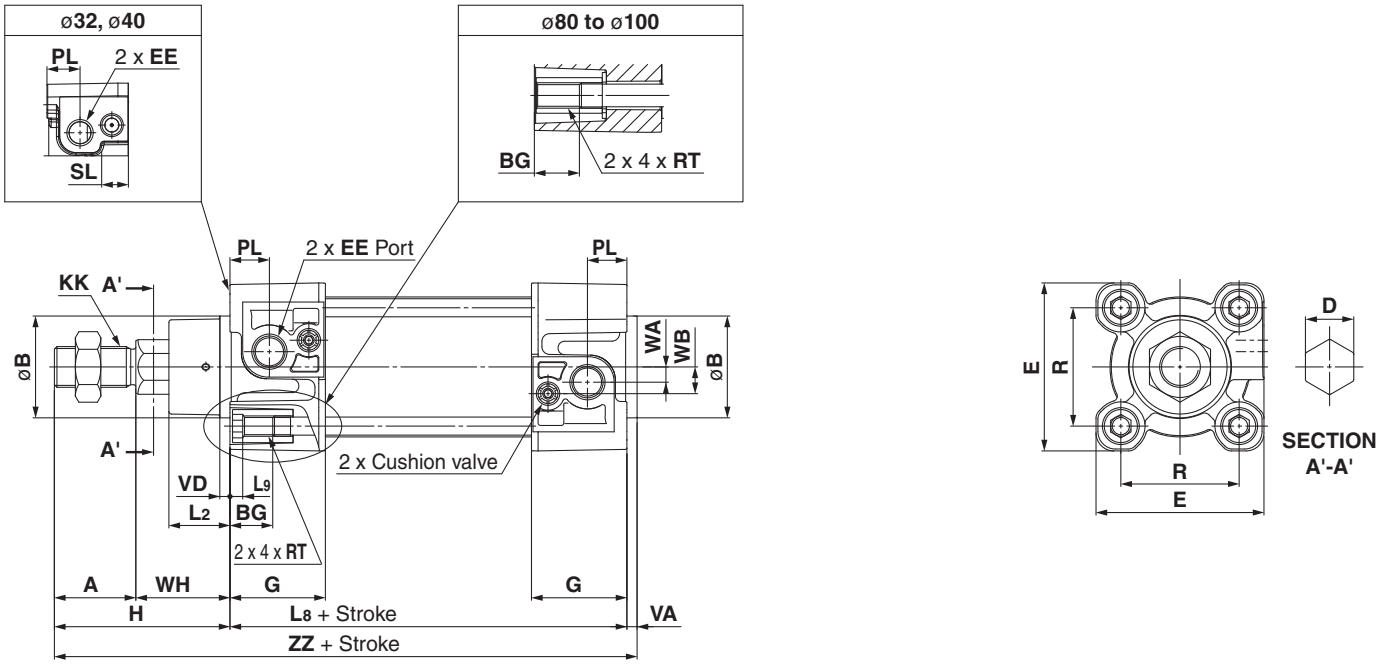

C96K(D)B Bore size – Stroke W

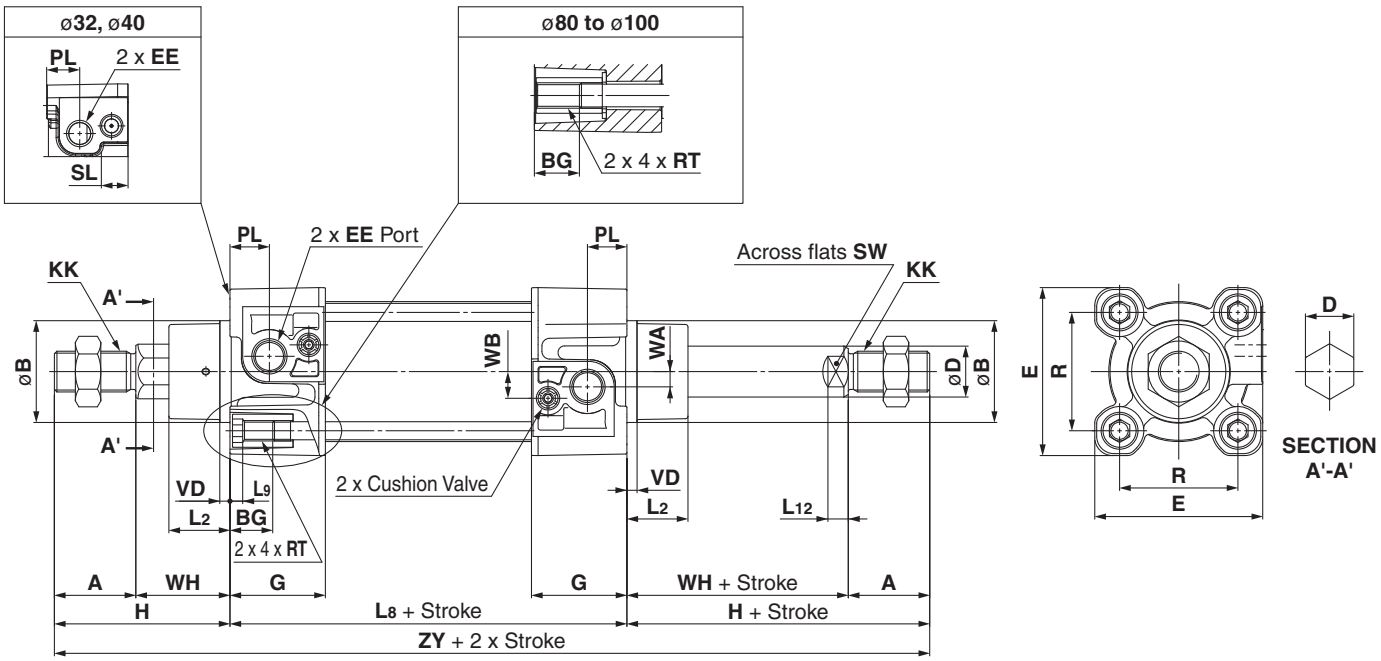

∗ Mounting bracket are the same as standard type.
Refer to page 33 for details.

Bore size (mm)	Stroke Range (mm)	A	øB d11	D	øD	EE	PL	RT	L12	KK	SW	G	BG	L8	VD	VA	WA	WB	WH	ZZ	ZY	E	R	L2	L9	H	SL
32	to 500	22	30	12.2	12	G 1/8	13	M6 x 1	6	M10 x 1.25	10	32	16	94	4	4	4	7	26	146	190	47	32.5	15	4	48	10
40	to 500	24	35	14.2	16	G 1/4	14	M6 x 1	6.5	M12 x 1.25	13	37.5	16	105	4	4	5	9	30	163	213	54	38	17	4	54	12
50	to 600	32	40	19	20	G 1/4	15.5	M8 x 1.25	8	M16 x 1.5	17	37.5	16	106	4	4	6	10.5	37	179	244	66	46.5	24	5	69	—
63	to 600	32	45	19	20	G 3/8	16.5	M8 x 1.25	8	M16 x 1.5	17	45	16	121	4	4	9	12	37	194	259	77	56.5	24	5	69	—
80	to 800	40	45	23	25	G 3/8	19	M10 x 1.5	10	M20 x 1.5	22	45	17	128	4	4	11.5	14	46	218	300	99	72	30	—	86	—
100	to 800	40	55	23	25	G 1/2	19	M10 x 1.5	10	M20 x 1.5	22	50	17	138	4	4	17	15	51	233	320	118	89	32	—	91	—

ISO Cylinder: Smooth cylinder
Double Acting, Single Rod
Series C96Y
ø32, ø40, ø50, ø63, ø80, ø100, ø125

How to Order

With auto switch **C96YD B 32 – 100 – M9BW S**

Built-in magnet

Mounting

B	Basic/Without bracket
L	Axial foot
F	Rod end flange
G	Head end flange
C	Single clevis
D	Double clevis
T	Centre trunnion

Bore size

32	32 mm
40	40 mm
50	50 mm
63	63 mm
80	80 mm
100	100 mm
125	125 mm

Stroke (mm)
Refer to "Maximum Stroke" on page 42.

Auto switch

—	Without auto switch

∗ For applicable auto switch model, refer to the below table.

Number of auto switches

—	2 pcs.
S	1 pc.
3	3 pcs.
n	"n" pcs.

Applicable Auto Switches/Tie-rod Mounting

Type	Special function	Electrical entry	Indicator light	Wiring (Output)	Load voltage DC		Load voltage AC	Auto switch model: Tie-rod mounting	Auto switch model: Band mounting	Lead wire length (m): 0.5 (—)	1 (M)	3 (L)	5 (Z)	Pre-wired connector	Applicable load	
Solid state switch	—	Grommet	Yes	3-wire (NPN)	24 V	5 V, 12 V	—	M9N	—	●	●	●	○	○	IC	Relay, PLC
				3-wire (PNP)				M9P	—	●	●	●	○	○		
				2-wire		12 V		M9B	—	●	●	●	○	○	—	
					—	—	100 V, 200 V	J51	—	●	—	●	○	—		
		Terminal conduit		3-wire (NPN)	24 V	5 V, 12 V	—	—	G39	—	—	—	—	—	IC	
				2-wire		12 V		—	K39	—	—	—	—	—	—	
	Diagnosis indication (2-colour)	Grommet		3-wire (NPN)		5 V, 12 V		M9NW	—	●	●	●	○	○	IC	
				3-wire (PNP)				M9PW	—	●	●	●	○	○		
				2-wire		12 V		M9BW	—	●	●	●	○	○	—	
	Water resistant (2-colour)			3-wire (NPN)		5 V, 12 V		M9NA**	—	○	○	●	○	○	IC	
				3-wire (PNP)				M9PA**	—	○	○	●	○	○		
				2-wire		12 V		M9BA**	—	○	○	●	○	○	—	
	Diagnosis output (2-colour)			4-wire (NPN)		5 V, 12 V		F59F	—	●	—	●	○	○	IC	
	Strong magnetic field resistant (2-colour)			2-wire (Non-polar type)		—		P4DW	—	—	—	●	●	○	—	
Reed switch	—	Grommet	Yes	3-wire (Equiv. to NPN)	—	5 V	—	A96	—	●	—	●	—	—	IC	—
				2-wire	24 V	12 V	100 V	A93	—	●	—	●	—	—	—	Relay, PLC
			None				100 V, 200 V	A90	—	●	—	●	—	—	IC	
			None				200 V or less	A64	—	●	—	●	—	—	—	
		Terminal conduit	Yes				—	—	A33	—	—	—	—	—	—	PLC
		DIN					100 V, 200 V	—	A34	—	—	—	—	—		Relay, PLC
								—	A44	—	—	—	—	—		
	Diagnosis indication (2-colour)	Grommet				—	—	A59W	—	●	—	●	—	—		

∗ Lead wire length symbols: 0.5 m ····· — (Example) M9NW
1 m ····· M (Example) M9NWM
3 m ····· L (Example) M9NWL
5 m ····· Z (Example) M9NWZ

∗ Solid state switches marked with "○" are produced upon receipt of order.

∗ Since there are other applicable auto switches than listed, refer to the auto switch guide.
∗ For details about auto switches with pre-wired connector, refer to the auto switch guide.
∗ D-A9□, M9□, M9□W, M9□AL are shipped together, (but not assembled).
(Switch mounting bracket is only assembled at the time of shipment.)
∗∗ Water resistant type auto switches can be mounted on the above models, but in such case SMC cannot guarantee water resistance.
Consult with SMC regarding water resistant types with the above model numbers.

Designed with a low sliding resistance of the piston, this air cylinder is ideal for applications such as contact pressure control, which requires smooth movements at low pressure.

Low sliding resistance

Min. operating pressure –0.01MPa

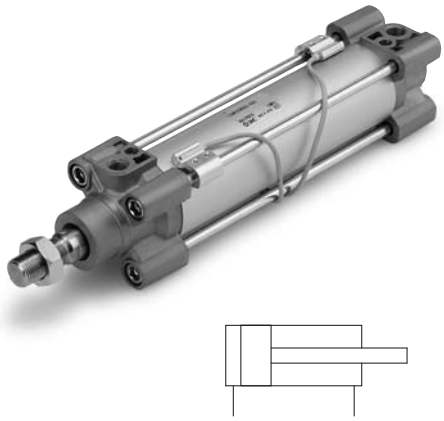

Minimum Stroke for Auto Switch Mounting

Refer to page 48 for “Minimum Stroke for Auto Switch Mounting”.

Sliding resistance

Bi-directional low-friction operation possible.

Pressure can be controlled regardless of its direction.

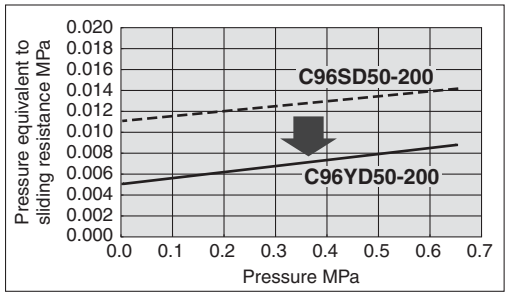

Application Example

Smooth cylinder combined with precision regulator (e.g. Series IR)

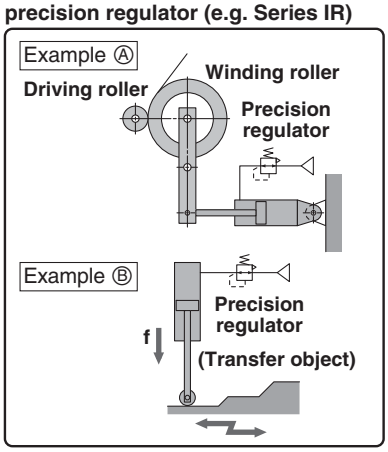

Specifications

Bore size (mm)	32	40	50	63	80	100	125
Action	Double acting						
Fluid	Air						
Proof pressure	1.05 MPa						
Max. operating pressure	0.7 MPa						
Min. operating pressure	0.02 MPa		0.01 MPa				
Ambient and fluid temperature	Without auto switch: –10 to 70°C* With auto switch: –10 to 60°C*						
Lubrication	Not required (Non-lube)						
Operating piston speed	5 to 500 mm/s						
Allowable stroke tolerance	Up to 250 st: $^{+1.0}_{0}$, 251 to 1000 st: $^{+1.4}_{0}$						
Cushion	Non						
Port size	G 1/8	G 1/4	G 1/4	G 3/8	G 3/8	G 1/2	G 1/2
Mounting	Basic, Axial foot, Rod end flange, Head end flange, Single clevis, Double clevis, Centre trunnion						
Allowable air leak	0.5 ℓ/min (ANR)						

* No freezing

Dimensions are the same as standard type. Refer to page 31 for details.

Maximum stroke

Bore size (mm)	Max. stroke*
32	800
40	800
50	1000
63	1000
80	1000
100	1000
125	1000

Intermediate strokes are available.

* Please consult with SMC for longer strokes.

Accessories

Mounting		Basic	Foot	Rod end flange	Head end flange	Single clevis	Double clevis	Centre trunnion
Standard	Rod end nut	●	●	●	●	●	●	●
	Clevis pin	—	—	—	—	—	●	—
Option	Piston rod ball joint	●	●	●	●	●	●	●
	Rod clevis	●	●	●	●	●	●	●
	Rod boot	—	—	—	—	—	—	—

* Please do not use a piston rod ball joint (or floating joint) together with a head end clevis with a ball joint (or angled head end clevis with a ball joint).

Construction

[First angle projection]

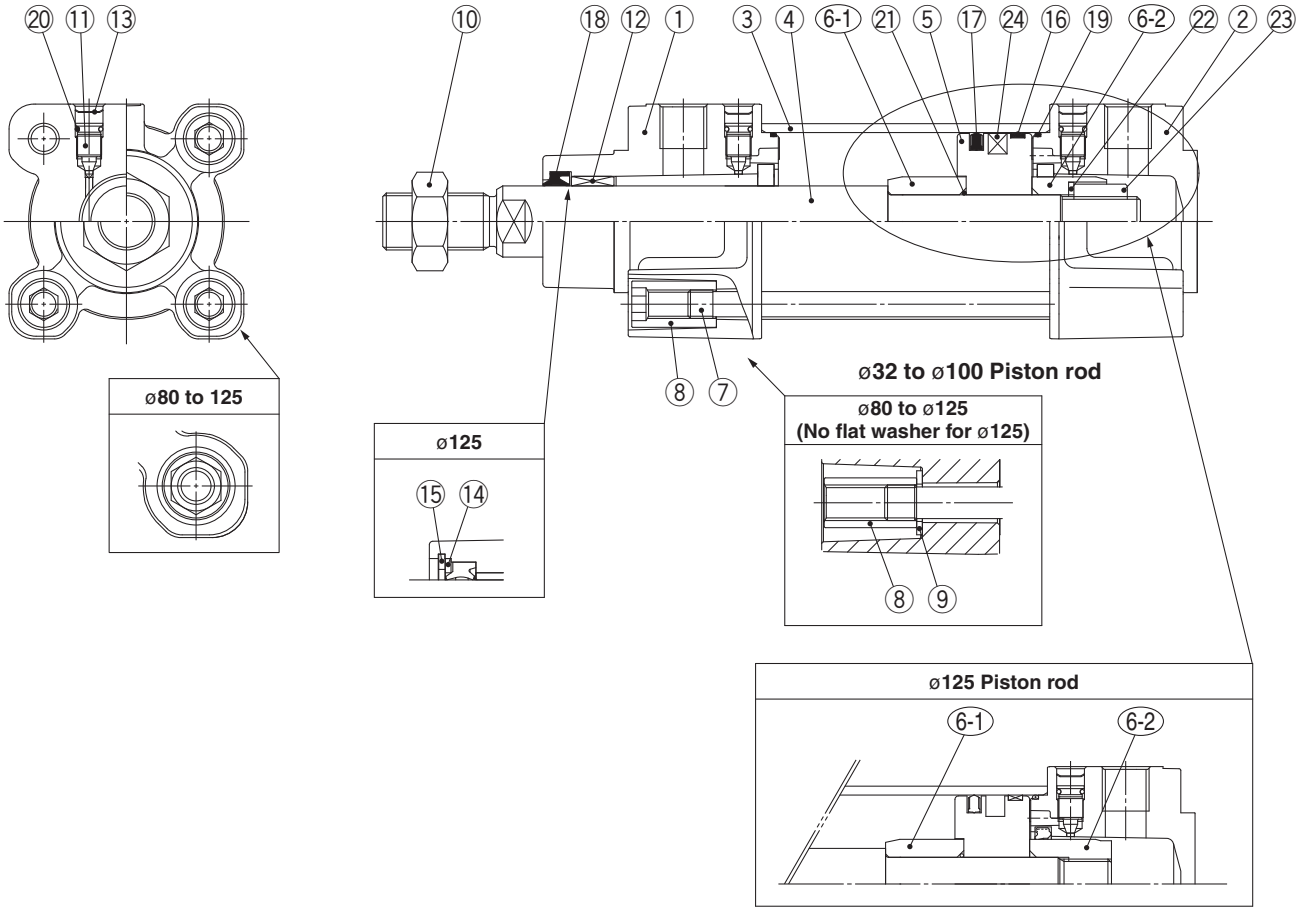

Component Parts

No.	Description	Material	Note
1	**Rod cover**	Aluminium die-casted	
2	**Head cover**	Aluminium die-casted	
3	**Cylinder tube**	Aluminium alloy	
4	**Piston rod**	Carbon steel	
5	**Piston**	Aluminium alloy	
6-1	**Cushion ring**	Steel	
6-2	**Cushion ring**	Steel	
7	**Tie-rod**	Carbon steel	
8	**Tie-rod nut**	Steel	
9	**Flat washer**	Steel	ø80 and ø100
10	**Rod end nut**	Steel	
11	**Cushion valve**	Steel wire	
12	**Bushing**	Bearing alloy	
13	**Snap ring**	Steel for spring	ø40 to ø125
14	**Rod seal holder**	Stainless steel	ø125
15	**Snap ring**	Steel for spring	ø125
16	**Wearing**	Resin	
17	**Piston seal**	NBR	
18	**Rod seal**	NBR	
19	**Cylinder tube gasket**	NBR	
20	**Cushion valve seal**	NBR	
21	**Piston gasket**	NBR	
22	**Spring washer**	Steel	
23	**Piston nut**	Steel	
24	**Magnet**		

Replacement Parts: Seal Kit

Bore size (mm)	Kit no.	Contents
32	C96Y32-PS	Kits include items ⑯ to ⑲.
40	C96Y40-PS	
50	C96Y50-PS	
63	C96Y63-PS	
80	C96Y80-PS	
100	C96Y100-PS	
125	C96Y125-PS	

∗ Seal kits consist of items ⑯ to ⑲ contained in one kit, and can be orderd using the number for each respective tube bore size.

∗ Do not use grease not specified.
Order using the following part numbers when only maintenance grease is needed.

Volume	Part no.
5g	GR-L-005
10g	GR-L-010
150g	GR-L-150

Smooth Cylinder
Specific Product Precautions 1

Be sure to read before handling.
Refer to Back cover for Safety Instructions and pages 65 to 70 for Actuator and Auto Switch Precautions.

Recommended Pneumatic Circuit

Refer to the diagrams below when controlling speed with the smooth cylinder.

⚠ Warning

Horizontal operation (Speed control)

I

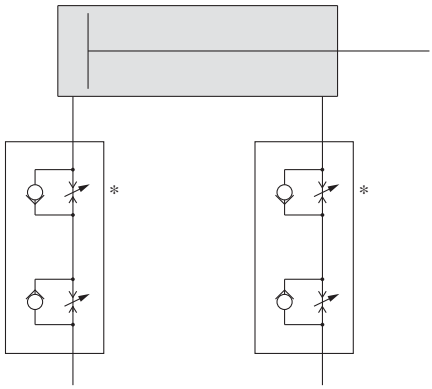

Dual speed controller

Speed is controlled by meter-out circuit. Using concurrently the meter-in circuit can alleviate the stick-slip. More stable low speed operation can be achieved than meter-in circuit alone.

II

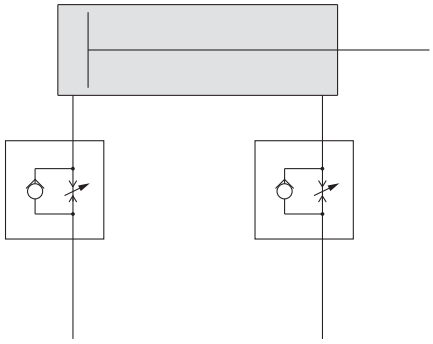

Meter-in speed controller

Meter-in speed controllers can reduce lurching while controlling the speed. The two adjustment needles facilitate adjustment.

Vertical operation (Speed control)

I

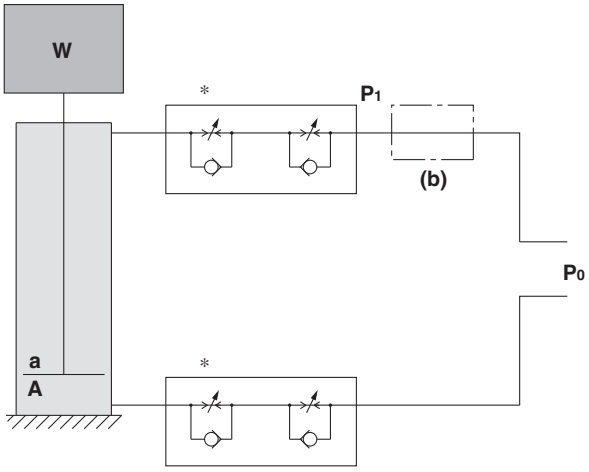

(1) Speed is controlled by meter-out circuit. Using concurrently the meter-in circuit can alleviate the stick-slip.*

(2) Depending on the size of the load, installing a regulator with check valve at position **(b)** can reduce lurching during descent and operation delay during ascent.
As a guide,
when **W + P0a>P0A**,
adjust **P1** to make **W + P1a = P0A**.

II

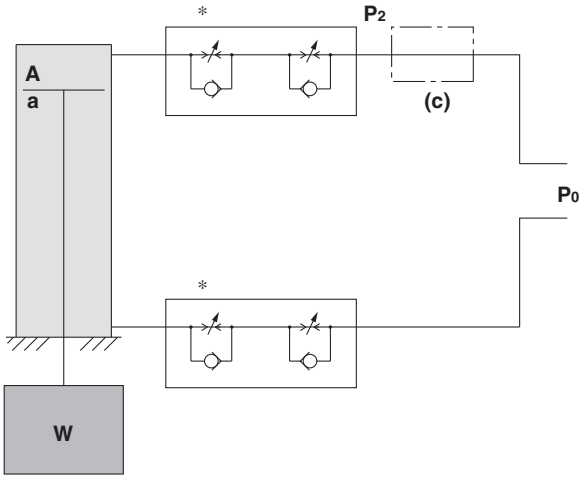

(1) Speed is controlled by meter-out circuit. Using concurrently the meter-in circuit can alleviate the stick-slip.*

(2) Installing a regulator with check valve at position **(c)** can reduce lurching during descent and operation delay during ascent.
As a guide,
adjust **P2** to make **W + P2A = P0a**.

W: Load (N) **P0**: Operating pressure (MPa) **P1, P2**: Reduced pressure (MPa) **a**: Rod side piston area (mm^2) **A**: Head side piston area (mm^2)

Smooth Cylinder
Specific Product Precautions 2

Be sure to read before handling.
Refer to Back cover for Safety Instructions and pages 65 to 70 for Actuator and Auto Switch Precautions.

Lubricant

⚠Caution

1. Operate without lubrication.

Lubrication may cause malfunction.

2. Do not use grease not specified by SMC.

Using grease other than that specified may cause malfunction.

● Order using the following part numbers when only maintenance grease is needed.

Grease

Volume	Part no.
5 g	GR-L-005
10 g	GR-L-010
150 g	GR-L-150

3. Do not wipe off grease from the sliding part of the air cylinder.

Wiping grease from the sliding part of the air cylinder forcefully may cause malfunction.

Air Source

⚠Caution

1. Take measure to prevent pressure fluctuations.

Pressure fluctuations may cause malfunction.

ISO Cylinder: Double Acting

Series 55-C96

ø32, ø40, ø50, ø63, ø80, ø100, ø125

How to Order

55-C96SD B 32 – 100 W

ATEX category 2

Piston rod type

S	Standard
K	Non-rotating rod (32~100 only)
Y	Smooth cylinder

Built-in magnet

Mounting

B	Basic/Without bracket
L	Axial foot
F	Rod end flange
G	Head end flange
C	Single clevis
D	Double clevis
T	Centre trunnion

Bore size

32	32 mm
40	40 mm
50	50 mm
63	63 mm
80	80 mm
100	100 mm
125	125 mm

Stroke (mm)

Refer to standard stroke table

Rod Specifications

—	Single rod
W*	Double rod

* Not available in smooth cylinder

Made to order*

—	Standard
-XA□	Special rod end change
-XC4	With heavy duty scraper (32 ~ 100 only)
-XC7	Tie rod, cushion valve, tie-rod nut, etc, made of stainless steel
-XC14	Trunnion position change
-XC22	Fluororubber seals
-XC68	Stainless steel rod and nut

* Only for Standard type

Classification	Without magnet type	With magnet type D
2 GD c	T 85°C (T5) Ta -20°C to 40°C T 105°C (T4) Ta 40°C to 60°C	T 85°C (T5) Ta -10°C to 40°C T 105°C (T4) Ta 40°C to 60°C

[For 55-C96]
When using an Auto switch, select the appropriate switch from the following table and order it separately.

Applicable auto switch specifications
Auto switch only conforms to Category 3. (II 3GD EEx nA II T5x -10°C ≤Ta≤ +60°C IP67.)
For detailed specifications on the D-M9□, D-M9□W, D-A93 and D-A90, please refer to the auto switch guide.
(Note: Reed auto switches for AC 100V and DC 100V are not within the specification.)

Type	Special function	Model No.	Electrical entry	Indicator	Wiring (Output)	Load voltage DC		Load voltage AC	Lead wire (m) 0.5 (—)	1 (M)	3 (L)	5 (Z)	Applicable load	
Solid state switch	—	D-M9N□-588	Grommet	Yes	3-wire (NPN)	24 V	5 V, 12 V	—	●	—	●	○	IC	Relay PLC
		D-M9P□-588			3-wire (PNP)				●	—	●	○		
		D-M9B□-588			2-wire		12 V		●	—	●	○	—	
	Diagnosis indication (2-colour)	D-M9NW□-588			3-wire (NPN)		5 V, 12 V		●	●	●	○	IC	
		D-M9PW□-588			3-wire (PNP)				●	●	●	○		
		D-M9BW□-588			2-wire		12 V	—	●	●	●	○	—	
Reed switch	—	D-A93□-588	Grommet	Yes	2-wire	24 V	12 V	100 V	●	—	●	—	—	Relay PLC
		D-A90□-588		None				100 V or less	●	—	●	—	IC	

* Lead wire length symbols: 0.5 m ····· — (Example) D-M9BW-588
1 m ····· M (Example) D-M9BWM-588
3 m ····· L (Example) D-M9BWL-588
5 m ····· Z (Example) D-M9BWZ-588

Note 1) ○ solid state auto switch is available after receiving an order.

Note 2) When mounting an auto switch on a 55- series (Category 2) Model, the ATEX category of the auto switch cylinder changes to Category 3, which is the same category as the auto switch.

When ordering a tie rod mounting type auto switch, also order a mounting bracket from the following listat the same time.
Auto switch mounting bracket/ Part no. (Tie rod mounting)

Auto switch Model	Tube I.D. (mm) 32, 40	50, 63	80, 10	125
D-M9N□-588	BMB5-032	BA7-040	BA7-063	BA7-080
D-M9P□-588				
D-M9B□-588				
D-M9NW□-588				
D-M9PW□-588				
D-M9BW□-588				
D-A93□-588				
D-A90□-588				

Auto Switch Mounting 1

Minimum Stroke for Auto Switch Mounting

(mm)

Auto switch model	Number of auto switch mounted	Centre trunnion							Support bracket other than Centre trunnion		
		ø32	ø40	ø50	ø63	ø80	ø100	ø125	ø32, ø40, ø50, ø63	ø80, ø100	ø125
D-A9□	1 switch, 2 switches (Different side, Same side)	70	75		80	85	95	100	15		
	Other qty.	70 + 40 (n – 4)/2 n = 4, 8, 12, 16···	75 + 40 (n – 4)/2 n = 4, 8, 12, 16···		80 + 40 (n – 4)/2 n = 4, 8, 12, 16···	85 + 40 (n – 4)/2 n = 4, 8, 12, 16···	95 + 40 (n – 4)/2 n = 4, 8, 12, 16···	100 + 40 (n – 4)/2 n = 4, 8, 12, 16···	15 + 40 (n – 2)/2 n = 2, 4, 6, 8···		
D-A9□V	1 switch, 2 switches (Different side, Same side)	45	50		55	60	70	75	10		
	Other qty.	45 + 30 (n – 4)/2 n = 4, 8, 12, 16···	50 + 30 (n – 4)/2 n = 4, 8, 12, 16···		55 + 30 (n – 4)/2 n = 4, 8, 12, 16···	60 + 30 (n – 4)/2 n = 4, 8, 12, 16···	70 + 30 (n – 4)/2 n = 4, 8, 12, 16···	75 + 30 (n – 4)/2 n = 4, 8, 12, 16···	10 + 30 (n – 2)/2 n = 2, 4, 6, 8···		
D-M9□ D-M9□W	1 switch, 2 switches (Different side, Same side)	75	80		85	90	95	105	15		
	Other qty.	75 + 40 (n – 4)/2 n = 4, 8, 12, 16···	80 + 40 (n – 4)/2 n = 4, 8, 12, 16···		85 + 40 (n – 4)/2 n = 4, 8, 12, 16···	90 + 40 (n – 4)/2 n = 4, 8, 12, 16···	95 + 40 (n – 4)/2 n = 4, 8, 12, 16···	105 + 40 (n – 4)/2 n = 4, 8, 12, 16···	15 + 40 (n – 2)/2 n = 2, 4, 6, 8···		
D-M9□V D-M9□WV	1 switch, 2 switches (Different side, Same side)	50	55		60	65	70	80	10		
	Other qty.	50 + 30 (n – 4)/2 n = 4, 8, 12, 16···	55 + 30 (n – 4)/2 n = 4, 8, 12, 16···		60 + 30 (n – 4)/2 n = 4, 8, 12, 16···	65 + 30 (n – 4)/2 n = 4, 8, 12, 16···	70 + 30 (n – 4)/2 n = 4, 8, 12, 16···	80 + 30 (n – 4)/2 n = 4, 8, 12, 16···	10 + 30 (n – 2)/2 n = 2, 4, 6, 8···		
D-M9□AL	1 switch, 2 switches (Different side, Same side)	80	85		90	95	100	110	15		
	Other qty.	80 + 40 (n – 2)/2 n = 4, 8, 12, 16···	85 + 40 (n – 2)/2 n = 4, 8, 12, 16···		90 + 40 (n – 2)/2 n = 4, 8, 12, 16···	95 + 40 (n – 2)/2 n = 4, 8, 12, 16···	100 + 40 (n – 2)/2 n = 4, 8, 12, 16···	110 + 40 (n – 2)/2 n = 4, 8, 12, 16···	15 + 40 (n – 2)/2 n = 2, 4, 6, 8···		
D-M9□AVL	1 switch, 2 switches (Different side, Same side)	55	60		65	70	75	85	15		
	Other qty.	55 + 30 (n – 2)/2 n = 4, 8, 12, 16···	60 + 30 (n – 2)/2 n = 4, 8, 12, 16···		65 + 30 (n – 2)/2 n = 4, 8, 12, 16···	70 + 30 (n – 2)/2 n = 4, 8, 12, 16···	75 + 30 (n – 2)/2 n = 4, 8, 12, 16···	85 + 30 (n – 2)/2 n = 4, 8, 12, 16···	15 + 30 (n – 2)/2 n = 2, 4, 6, 8···		
D-A3□ D-G39 D-K39	2 switches (Different side)	60	65		75	80	85	90	35		
	2 switches (Same side)	90	95		100	105	110	125	100		
	Other qty. (Different side)	60 + 30 (n – 2) n = 2, 4, 6, 8···	65 + 30 (n – 2) n = 2, 4, 6, 8···		75 + 30 (n – 2) n = 2, 4, 6, 8···	80 + 30 (n – 2) n = 2, 4, 6, 8···	85 + 30 (n – 2) n = 2, 4, 6, 8···	90 + 30 (n – 2) n = 2, 4, 6, 8···	35 + 30 (n – 2) n = 2, 3, 4···		
	Other qty. (Same side)	90 + 100 (n – 2) n = 2, 4, 6, 8···	95 + 100 (n – 2) n = 2, 4, 6, 8···		100 + 100 (n – 2) n = 2, 4, 6, 8···	105 + 100 (n – 2) n = 2, 4, 6, 8···	110 + 100 (n – 2) n = 2, 4, 6, 8···	125 + 100 (n – 2) n = 2, 4, 6, 8···	100 + 100 (n – 2) n = 2, 3, 4···		
	1 switch	60	65		75	80	85	90	10		
D-A44	2 switches (Different side)	70	75		80		85	90	35		
	2 switches (Same side)	70	75		80		85	90	55		
	Other qty. (Different side)	70 + 30 (n – 2) n = 2, 4, 6, 8···	75 + 30 (n – 2) n = 2, 4, 6, 8···		80 + 30 (n – 2) n = 2, 4, 6, 8···		85 + 30 (n – 2) n = 2, 4, 6, 8···	90 + 30 (n – 2) n = 2, 4, 6, 8···	35 + 30 (n – 2) n = 2, 3, 4···		
	Other qty. (Same side)	70 + 50 (n – 2) n = 2, 4, 6, 8···	75 + 50 (n – 2) n = 2, 4, 6, 8···		80 + 50 (n – 2) n = 2, 4, 6, 8···		85 + 50 (n – 2) n = 2, 4, 6, 8···	90 + 50 (n – 2) n = 2, 4, 6, 8···	55 + 50 (n – 2) n = 2, 3, 4···		
	1 switch	70	75		80		85	90	10		
D-A5□ D-A6□	1 switch, 2 switches (Different side, Same side)	60		80	105	110	115		15	20	
	Other qty. (Same side)	60 + 55 (n – 4)/2 n = 4, 8, 12, 16···		80 + 55 (n – 4)/2 n = 4, 8, 12, 16···	105 + 55 (n – 4)/2 n = 4, 8, 12, 16···	110 + 55 (n – 4)/2 n = 4, 8, 12, 16···	115 + 55 (n – 4)/2 n = 4, 8, 12, 16···		15 + 55 (n – 2)/2 n = 2, 4, 6, 8···	20 + 55 (n – 2)/2 n = 2, 4, 6, 8···	
D-A59W	2 switches (Different side, Same side)	60	70	85	110	115	120		20	25	
	Other qty. (Same side)	60 + 55 (n – 4)/2 n = 4, 8, 12, 16···	70 + 55 (n – 4)/2 n = 4, 8, 12, 16···	85 + 55 (n – 4)/2 n = 4, 8, 12, 16···	110 + 55 (n – 4)/2 n = 4, 8, 12, 16···	115 + 55 (n – 4)/2 n = 4, 8, 12, 16···	120 + 55 (n – 4)/2 n = 4, 8, 12, 16···		20 + 55 (n – 2)/2 n = 2, 4, 6, 8···	25 + 55 (n – 2)/2 n = 2, 4, 6, 8···	
	1 switch	60	70	85	110	115	120		15	25	
D-F5□ D-J5□ D-F5□W D-J59W D-F5BAL D-F59F	2 switches (Different side, Same side)	90	95		110	115	120	130	15	25	
	Other qty. (Same side)	90 + 55 (n – 4)/2 n = 4, 8, 12, 16···	95 + 55 (n – 4)/2 n = 4, 8, 12, 16···		110 + 55 (n – 4)/2 n = 4, 8, 12, 16···	115 + 55 (n – 4)/2 n = 4, 8, 12, 16···	120 + 55 (n – 4)/2 n = 4, 8, 12, 16···	130 + 55 (n – 4)/2 n = 4, 8, 12, 16···	15 + 55 (n – 2)/2 n = 2, 4, 6, 8···	25 + 55 (n – 2)/2 n = 2, 4, 6, 8···	
	1 switch	90	95		110	115	120	130	10	25	
D-F5NTL	2 switches (Different side, Same side)	100	105		120	125	130	140	15	25	30
	Other qty. (Same side)	100 + 55 (n – 4)/2 n = 4, 8, 12, 16···	105 + 55 (n – 4)/2 n = 4, 8, 12, 16···		120 + 55 (n – 4)/2 n = 4, 8, 12, 16···	125 + 55 (n – 4)/2 n = 4, 8, 12, 16···	130 + 55 (n – 4)/2 n = 4, 8, 12, 16···	140 + 55 (n – 4)/2 n = 4, 8, 12, 16···	15 + 55 (n – 2)/2 n = 2, 4, 6, 8···	25 + 55 (n – 2)/2 n = 2, 4, 6, 8···	30 + 55 (n – 2)/2 n = 2, 4, 6, 8···
	1 switch	100	105		120	125	130	140	10	25	30
D-Z7□ D-Z80 D-Y59□ D-Y7P D-Y7□W	1 switch, 2 switches (Different side, Same side)	80	85	90		95	100	105	15		
	Other qty.	80 + 40 (n – 4)/2 n = 4, 8, 12, 16···	85 + 40 (n – 4)/2 n = 4, 8, 12, 16···	90 + 40 (n – 4)/2 n = 4, 8, 12, 16···		95 + 40 (n – 4)/2 n = 4, 8, 12, 16···	100 + 40 (n – 4)/2 n = 4, 8, 12, 16···	105 + 40 (n – 4)/2 n = 4, 8, 12, 16···	15 + 40 (n – 2)/2 n = 2, 4, 6, 8···		
D-Y69□ D-Y7PV D-Y7□WV	1 switch, 2 switches (Different side, Same side)	60	65		70	75	85		10		
	Other qty.	60 + 30 (n – 4)/2 n = 4, 8, 12, 16···	65 + 30 (n – 4)/2 n = 4, 8, 12, 16···		70 + 30 (n – 4)/2 n = 4, 8, 12, 16···	75 + 30 (n – 4)/2 n = 4, 8, 12, 16···	85 + 30 (n – 4)/2 n = 4, 8, 12, 16···		10 + 30 (n – 2)/2 n = 2, 4, 6, 8···		
D-Y7BAL	1 switch, 2 switches (Different side, Same side)	85	90		100	105	110	115	20		
	Other qty.	85 + 45 (n – 4)/2 n = 4, 8, 12, 16···	90 + 45 (n – 4)/2 n = 4, 8, 12, 16···		100 + 45 (n – 4)/2 n = 4, 8, 12, 16···	105 + 45 (n – 4)/2 n = 4, 8, 12, 16···	110 + 45 (n – 4)/2 n = 4, 8, 12, 16···	115 + 45 (n – 4)/2 n = 4, 8, 12, 16···	20 + 45 (n – 2)/2 n = 2, 4, 6, 8···		
D-P4DWL	1 switch, 2 switches (Different side, Same side)	120		130		140		150	15		20
	Other qty.	120 + 65 (n – 4)/2 n = 4, 8, 12, 16···		130 + 65 (n – 4)/2 n = 4, 8, 12, 16···		140 + 65 (n – 4)/2 n = 4, 8, 12, 16···		150 + 65 (n – 4)/2 n = 4, 8, 12, 16···	15 + 65 (n – 2)/2 n = 2, 4, 6, 8···		20 + 65 (n – 2)/2 n = 2, 4, 6, 8···

Auto Switch Proper Mounting Position (Detection at Stroke End) and Its Mounting Height [First angle projection]

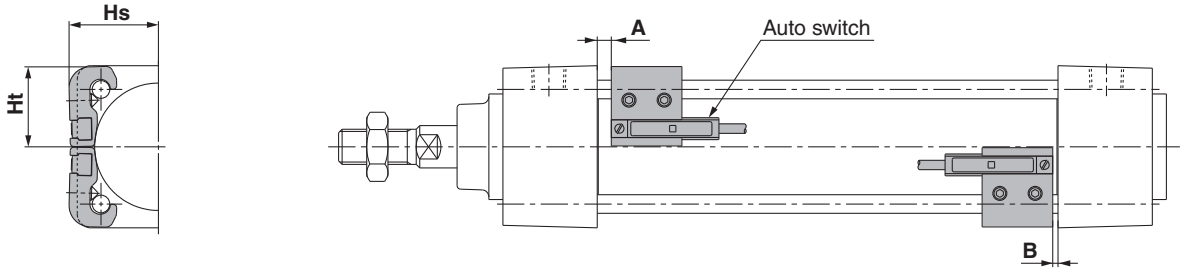

Auto Switch Proper Mounting Position

(mm)

Auto switch model / Bore size	D-A9□ D-A9□V		D-M9□ D-M9□V D-M9□W D-M9□WV D-M9□AL D-M9□AVL		D-A5□ D-A6□		D-A59W		D-F5□W D-J59W D-F5□ D-J5□ D-F5BAL D-F59F		D-F5NTL		D-A3□ D-A44 D-G39 D-K39		D-Z7□ D-Z80 D-Y59□ D-Y69□ D-Y7P D-Y7PV D-Y7□W D-Y7□WV D-Y7BAL		D-P4DWL	
	A	B	A	B	A	B	A	B	A	B	A	B	A	B	A	B	A	B
32	6.5	4	10.5	8	0.5	0	4.5	2	7	4.5	12	9.5	0.5	0	4	1.5	3.5	1
40	6.5	4	10.5	8	0.5	0	4.5	2	7	4.5	12	9.5	0.5	0	4	1.5	3.5	1
50	7	4.5	11	8.5	1	0	5	2.5	7.5	5	12.5	10	1	0	4.5	2	4	1.5
63	7	4.5	11	8.5	1	0	5	2.5	7.5	5	12.5	10	1	0	4.5	2	4	1.5
80	10	8.5	14	12.5	4	2.5	8	6.5	10.5	9	15.5	14	4	2.5	7.5	6	7	5.5
100	10	8.5	14	12.5	4	2.5	8	6.5	10.5	9	15.5	14	4	2.5	7.5	6	7	5.5
125	12	12	16	16	6	6	10	10	12.5	12.5	17.5	17.5	6	6	9.5	9.5	9	9

Note) Adjust the auto switch after confirming the operation to set actually.

Auto Switch Proper Mounting Height

(mm)

Auto switch model / Bore size	D-A9□ D-M9□ D-M9□W D-M9□AL		D-A9□V		D-M9□V D-M9□WV D-M9□AVL		D-A5□ D-A6□ D-A59W		D-F5□ D-J5□ D-F59F D-F5□W D-J59W D-F5BAL D-F5NTL		D-A3□ D-G39 D-K39		D-A44		D-Z7□ D-Z80 D-Y59□ D-Y7P D-Y7□W D-Y7BAL		D-Y69□ D-Y7PV D-Y7□WV		D-P4DWL	
	Hs	Ht	Hs	Ht	Hs	Ht	Hs	Ht	Hs	Ht	Hs	Ht	Hs	Ht	Hs	Ht	Hs	Ht	Hs	Ht
32	24.5	23	27.5	23	30.5	23	35	24.5	32.5	25	67	27.5	77	27.5	25.5	23	26.5	23	38	31
40	28.5	25.5	31.5	25.5	34	25.5	38.5	27.5	36.5	27.5	71.5	27.5	81.5	27.5	29.5	26	30	26	42	33
50	33.5	31	36	31	38.5	31	43.5	34.5	41	34	77	—	87	—	33.5	31	34.5	31	46.5	39
63	38.5	36	40.5	36	43	36	48.5	39.5	46	39	83.5	—	93.5	—	39	36	40	36	51.5	44
80	46.5	45	49	45	52	45	55	46.5	52.5	46.5	92.5	—	103	—	47.5	45	48.5	45	58	51.5
100	54	53.5	57	53.5	59.5	53.5	62	55	59.5	55	103	—	113.5	—	55.5	53.5	56.5	53.5	65.5	60.5
125	65.5	64.5	68.5	64.5	71	64.5	71.5	66.5	70.5	66.5	115	—	125	—	67.5	65	68.5	65	76.5	72

Series C96
Auto Switch Mounting 2

Auto Switch Mounting Bracket Part No.

Auto switch model	Bore size (mm)						
	ø32	ø40	ø50	ø63	ø80	ø100	ø125
D-A9□/A9□V **D-M9□/M9□V** **D-M9□W/M9□WV** **D-M9□AL/M9□AVL**	BMB5-032	BMB5-032	BA7-040	BA7-040	BA7-063	BA7-063	BA7-080
D-A3□/A44 **D-G39/K39**	BMB2-032	BMB2-040	BMB1-050	BMB1-063	BMB1-080	BMB1-100	BS1-125
D-A5□/A6□ **D-A59W** **D-F5□/J5□** **D-F5□W/J59W** **D-F59F** **D-F5BAL** **D-F5NTL**	BT-03	BT-03	BT-05	BT-05	BT-06	BT-06	BT-08
D-P4DWL	BMB3T-040	BMB3T-040	BMB3T-050	BMB3T-050	BMB3T-080	BMB3T-080	BAP2T-080
D-Z7□/Z80 **D-Y59□/Y69□** **D-Y7P/Y7PV** **D-Y7□W** **D-Y7□WV** **D-Y7BAL**	BMB4-032	BMB4-032	BMB4-050	BMB4-050	BA4-063	BA4-063	BA4-080

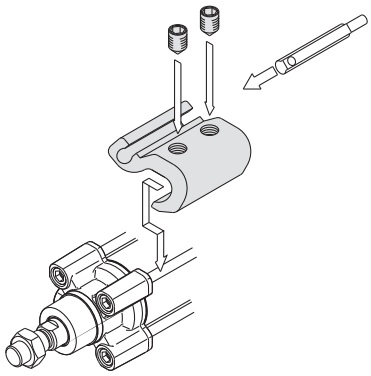

• Mounting example for D-A9□(V), M9□(V), M9□W(V), M9□A(V)L

[Mounting screws set made of stainless steel]

The following set of mounting screws made of stainless steel is also available. Use it in accordance with the operating environment. (Please order the mounting bracket separately, since it is not included.)

BBA1: For D-A5/A6/F5/J5

Note 1) For details on BBA1, refer to page 56.
"D-F5BAL" switch is set on the cylinder with the stainless steel screws above when shipped from factory.
When a switch is shipped independently, "BBA1" screws are attached.

Note 2) When using type D-M9□A(V)L or Y7BAL, please do not use the iron set screws included with the auto switch mounting bracket (BMB5-032, BA7-□□□, BAB4-□□□, BA4-□□□) shown above, instead order the set of stainless steel set screws (BBA1), and please use the stainless steel set screws (M4 x 6L) included in BBA1.

Operating Range

(mm)

Auto switch model	Bore size						
	32	40	50	63	80	100	125
D-A9□/A9□V	7	7.5	8.5	9.5	9.5	10.5	12
D-M9□/M9□V **D-M9□W/M9□WV** **D-M9□AL/M9□AVL**	4	4.5	5	6	6	6	7
D-Z7□/Z80	7.5	8.5	7.5	9.5	9.5	10.5	13
D-A5□/A6□	9	9	10	11	11	11	10
D-A59W	13	13	13	14	14	15	17
D-A3□/A44	9	9	10	11	11	11	10
D-Y59□/Y69□ **D-Y7P/Y7□V** **D-Y7□W/Y7□WV** **D-Y7BAL**	5.5	5.5	7	7.5	6.5	5.5	7
D-F5□/J5□ **D-F5□W/J59W** **D-F5BAL/F5NTL** **D-F59F**	3.5	4	4	4.5	4.5	4.5	5
D-G39/K39	9	9	9	10	10	11	11
D-P4DWL	4	4	4	4.5	4	4.5	4.5

∗ Since this is a guideline including hysteresis, not meant to be guaranteed.
(Assuming approximately ±30% dispersion.)
There may be the case it will vary substantially depending on an ambient environment.

Besides the models listed "How to Order," the following auto switches are applicable.
For detailed auto switch specifications, refer to the auto switch guide.

Type	Auto switch model	Electrical entry	Features
Solid state switch	D-M9NV, M9PV, M9BV	Grommet (Perpendicular)	—
	D-Y69A, Y69B, Y7PV		
	D-M9NWV, M9PWV, M9BWV		Diagnosis indication (2-colour)
	D-Y7NWV, Y7PWV, Y7BWV		
	D-M9NAVL, M9PAVL, M9BAVL		Water resistant (2-colour)
	D-Y59A, Y59B, Y7P	Grommet (In-line)	—
	D-F59, F5P, J59		
	D-Y7NW, Y7PW, Y7BW		Diagnosis indication (2-colour)
	D-F59W, F5PW, J59W		
	D-F5BAL, Y7BAL		Water resistant (2-colour)
	D-F5NTL		With timer
	D-P5DWL		Strong magnetic field resistant (2-colour)
Reed switch	D-A93V, A96V	Grommet (Perpendicular)	—
	D-A90V		Without indicator light
	D-A67, Z80	Grommet (In-line)	
	D-A53, A54, A56, Z73, Z76		—

∗ For details about auto switches with pre-wired connector, refer to the auto switch guide.
∗ Normally closed (NC = b contact), solid state switch (D-F9G, F9H, Y7G, Y7H type) are also available.
For details, refer to the auto switch guide.

⚠ Specific Product Precautions

Adjustment

⚠Warning

1. Do not open the cushion valve above the stopper.
Cushion valves are provided with a crimp (ø32) or a retaining ring (ø40 to ø125) as a stopping mechanism, and the cushion valve should not be opened above that point.
If air is supplied and operation started without confirming the above condition, the cushion valve may be ejected from the cover.

2. Be certain to activate the air cushion at the stroke end.
When it is intended to use the cushion valve in the fully opened position, select a style with a damper. If this is not done, the tie-rods or piston rod assembly will be damaged.

3. When replacing brackets, use the hexagon wrenches shown below.

Bore size (mm)	Width across flats	Tightening torque (N·m)
32, 40	4	4.8
50, 63	5	10.4
80, 100	6	18.2
125	10	28.5

Atex Compliant

Solid State Auto Switch With Pre-wired Connector

Refer to SMC website for the details of the products conforming to the international standards.

II 3GD Ex nA II T5x -10°C ≤Ta≤ +60°C
II 3GD tD A22 IP67 T93°C X

1 With Pre-wired Connector

- Eliminates the harnessing work by cable with connector specifications
- Adopts global standardised connector (IEC947-5-2)
- IP67 construction

Note) All other specifications (dimensions, drawings, etc.) are the same as the non ATEX type.

How to Order

D- M9N S A PC -588

Suffix for ATEX certified CAT.3

Solid state auto switch Standard part no.
For the applicable auto switch model, refer to the table below.

Cable length

S	0.5 m
M	1.0 m

Connector model

A	M8 - 3 pin
B	M8 - 4 pin
D	M12 - 4 pin

Connector Specifications

Connector model	M8-3 pins	M8-4 pins	M12-4 pins
Pin arrangement	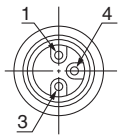	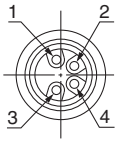	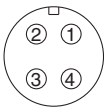
Conformed standard	JIS C 4524, JIS C 4525, IEC 947-5-2, NECA 0402		
Impact resistance	300 m/s^2		
Enclosure	IP-67 (IEC60529 standard)		
Insulation resistance	100 MΩ or more at 500 VDC Mega		
Withstand voltage	1500 VAC 1 minute (between contacts), leak current 1 mA or less		

Applicable Auto Switch

Mounting style	Function	Electrical entry	Applicable model	Lead wire lenght (m)	
				0.5	1.0
Tie-rod	—	Grommet (In-line)	F5P	●	—
Direct	—	Grommet (In-line)	Y7P	●	—
		Grommet (Perpendicular)	Y7PV	●	—
		Grommet (In-line)	M9N, M9P, M9B	●	●
		Grommet (Perpendicular)	M9NV, M9PV, M9BV	●	●
	2-colour indication	Grommet (In-line)	M9NW, M9PW, M9BW	●	●
		Grommet (Perpendicular)	M9NWV, M9PWV, M9BWV	●	●

∗ This category 3 type autoswitch can only be used in zones 2 and 22.

Solid State Auto Switch With Pre-wired Connector

Refer to SMC website for the details of the products conforming to the international standards.

CE

1 With Pre-wired Connector

- Eliminates the harnessing work by cable with connector specifications
- Adopts global standardised connector (IEC947-5-2)
- IP67 construction

How to Order

D-M9N S A PC

Solid state auto switch Standard part no.
For the applicable auto switch model, refer to the table below.

Cable length

S	0.5 m
M	1.0 m
L	3.0 m

Connector model

A	M8 - 3 pin
B	M8 - 4 pin
D	M12 - 4 pin

Connector Specifications

Connector model	M8-3 pins	M8-4 pins	M12-4 pins
Pin arrangement	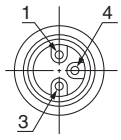	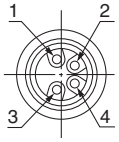	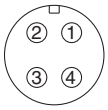
Conformed standard	JIS C 4524, JIS C 4525, IEC 947-5-2, NECA 0402		
Impact resistance	300 m/s^2		
Enclosure	IP-67 (IEC60529 standard)		
Insulation resistance	100 MΩ or more at 500 VDC Mega		
Withstand voltage	1500 VAC 1 minute (between contacts), leak current 1 mA or less		

Applicable Auto Switch

Mounting style	Function	Electrical entry	Applicable model	Lead wire lenght (m)		
				0.5	1.0	3.0
Rail	Magnetic field resistant	Grommet (In-line)	P4DW	—	—	●
Tie-rod	—		F59, F5P, J59	●	—	—
	2-colour indication		F59W, F5PW J59W	●	—	—
	Diagnostic output		F59F	●	—	—
	Water resistant		F5BA	—	—	—
	With timer		F5NT	—	—	—
Direct	—	Grommet (In-line)	Y59A, Y7P, Y59B	●	—	—
		Grommet (Perpendicular)	Y69A, Y7PV, Y69B	●	—	—
		Grommet (In-line)	M9N, M9P, M9B	●	●	—
		Grommet (Perpendicular)	M9NV, M9PV, M9BV	●	●	—
	2-colour indication	Grommet (In-line)	Y7NW, Y7PW, Y7BW	●	—	—
		Grommet (Perpendicular)	Y7NWV, Y7PWV, Y7BWV	●	—	—
		Grommet (In-line)	M9NW, M9PW, M9BW	●	●	—
		Grommet (Perpendicular)	M9NWV, M9PWV, M9BWV	●	●	—
	Water resistant	Grommet (In-line)	Y7BA	—	—	—
			M9NA, M9PA, M9BA	●	●	—
		Grommet (Perpendicular)	M9NAV, M9PAV, M9BAV	●	●	—

How to Mount and Move the Auto Switch 1

Mounting Bracket Tie-rod Mounting

<Applicable Auto Switch>

Solid state switch ··· D-G39, D-K39
Reed switch ····· D-A33, D-A34, D-A44

How to Mount and Move the Auto Switch

D-A3□, D-G3/K3 type

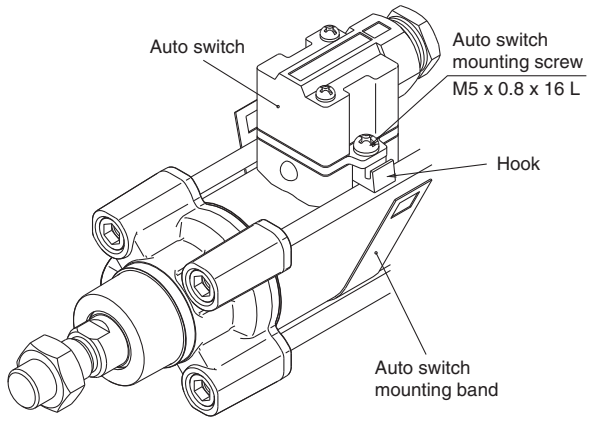

D-A44 type

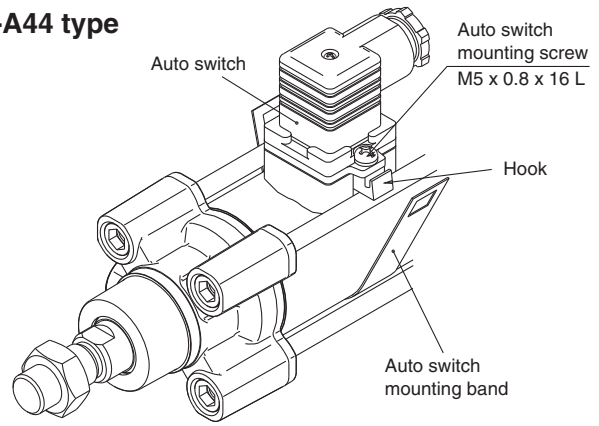

1. Loosen the auto switch mounting screws at both sides to pull down the hook.
2. Put an auto switch mounting band on the cylinder tube and set it at the auto switch mounting position, and then hook the band.
3. Screw lightly the auto switch mounting screw.
4. Set the whole body to the detecting position by sliding, tighten the mounting screw to secure the auto switch. (The tightening torque should be about 2 to 3 N·m.)
5. Modification of the detecting position should be made in the state of 3.

Auto Switch Mounting Bracket Part No. (Band)

Cylinder series	Applicable bore size (mm)						
	32	40	50	63	80	100	125
C96	BMB2 -032	BMB2 -040	BMB1 -050	BMB1 -063	BMB1 -080	BMB1 -100	BS1 -125

<Applicable Auto Switch>

Solid state switch ··· D-M9N(V), D-M9P(V), D-M9B(V)
D-M9NW(V), D-M9PW(V), D-M9BW(V)
D-M9NA(V), D-M9PA(V), D-M9BA(V)
Reed switch ····· D-A90(V), A93(V), A96(V)

How to Mount and Move the Auto Switch

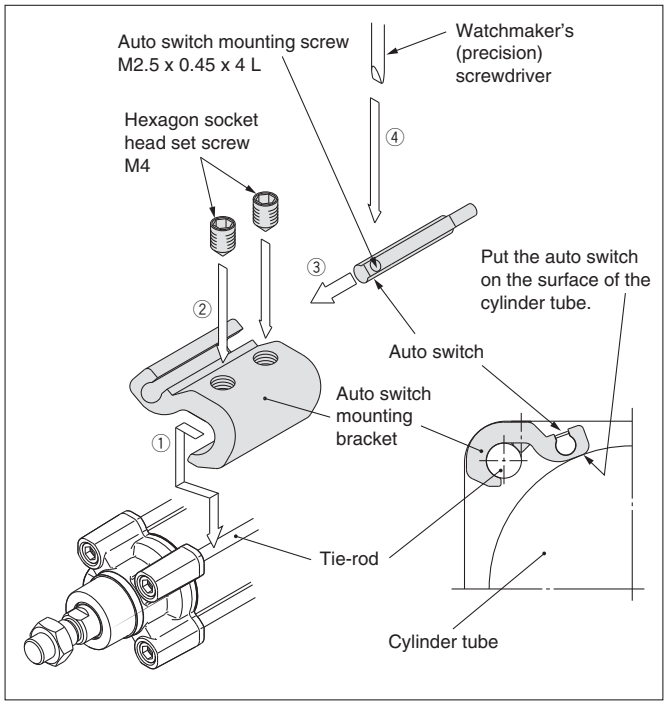

1. Fix it to the detecting position with a set screw by installing an auto switch mounting bracket in cylinder tie-rod and letting the bottom surface of an auto switch mounting bracket contact the cylinder tube firmly.
2. Fix it to the detecting position with a set screw (M4). (Use a hexagon wrench.)
3. Fit an auto switch into the auto switch mounting groove to set it roughly to the mounting position for an auto switch.
4. After confirming the detecting position, tighten up the mounting screw (M2.5) attached to an auto switch, and secure the auto switch.
5. When changing the detecting position, carry out in the state of 3.

Note 1) To protect auto switches, ensure that main body of an auto switch should be embedded into auto switch mounting groove with a depth of 15 mm or more.
Note 2) Set the tightening torque of a hexagon socket head set screw (M4) to be 1.0 to 1.2 N·m.
Note 3) When tightening an auto switch mounting screw (M2.5), use a watchmaker's screwdriver with a grip diameter of 5 to 6 mm. Also, set the tightening torque to be 0.05 to 0.15 N·m. As a guide, turn 90° from the position where it comes to feel tight.

Auto Switch Mounting Bracket Part No. (Including Bracket, Set Screw)

Cylinder series	Applicable bore size (mm)						
	32	40	50	63	80	100	125
C96	BMB5 -032	BMB5 -032	BA7 -040	BA7 -040	BA7 -063	BA7 -063	BA7 -080

Note 1) When using type D-M9□A(V)L, please order stainless steel screw set BBA1 separately (page 56) , and use the stainless steel set screws, after selecting set screws of the appropriate length for the cylinder series—as shown in the table above.
Note 2) Colour or gloss differences in the metal surfaces have no effect on metal performance.
The special properties of the chromate (trivalent) applied to the main body of the auto switch mounting bracket for BA7-□ and BMB5-□ result in differences in coloration depending on the production lot, but these have no adverse impact on corrosion resistance.

<Applicable Auto Switch>

Solid state switch ··· D-Y59A/B, Y69A/B, D-Y7P(V)
D-Y7NW(V), Y7PW(V), Y7BW(V)
D-Y7BAL
Reed switch ····· D-Z73, Z76, Z80

How to Mount and Move the Auto Switch

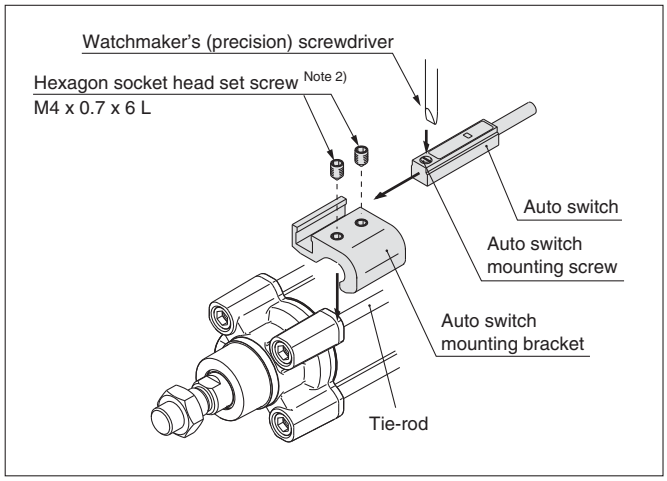

Note 1) When tightening an auto switch mounting screw, use a watchmaker's screwdriver with a handle diameter of 5 to 6 mm.
Also, set the tightening torque to be 0.05 to 0.1 N·m.
As a guide, turn 90° from the position where it comes to feel tight. Set the tightening torque of a hexagon socket head set screw (M4 x 0.7) to be 1.0 to 1.2 N·m.

1. Fix it to the detecting position with a set screw by installing an auto switch mounting bracket in cylinder tie-rod and letting the bottom surface of an auto switch mounting bracket contact the cylinder tube firmly. (Use a hexagon wrench.)
2. Fit an auto switch into the auto switch mounting groove to set it roughly to the mounting position for an auto switch.
3. After confirming the detecting position, tighten up the mounting screw attached to an auto switch, and secure the auto switch.
4. When changing the detecting position, carry out in the state of 2.

∗ To protect auto switches, ensure that main body of an auto switch should be embedded into auto switch mounting groove with a depth of 15 mm or more.

Auto Switch Mounting Bracket Part No. (Including Bracket, Set Screw)

Cylinder series	Applicable bore size (mm)						
	32	**40**	**50**	**63**	**80**	**100**	**125**
C96	BMB4 -032	BMB4 -032	BMB4 -050	BMB4 -050	BA4 -063	BA4 -063	BA4 -080

Note 2) When using type D-Y7BAL, please order stainless steel screw set BBA1 separately (page 56), and use the stainless steel set screws, after selecting set screws of the appropriate length for the cylinder series — as shown in the table above.

<Applicable Auto Switch>

Solid state switch ··· D-P4DWL

How to Mount and Move the Auto Switch

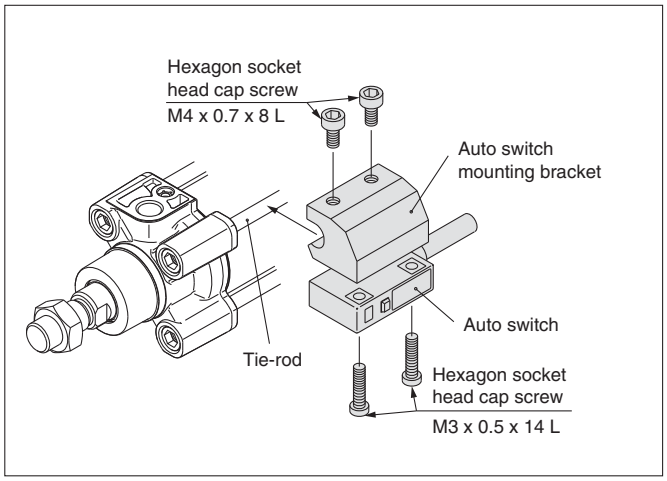

1. Slightly screw the hexagon socket head cap screw (M4 x 0.7 x 8 L) into the M4 tapped portion of auto switch mounting bracket. (2 locations) Use caution that the tip of the hexagon socket head cap screw should not stick out to the concave portion of auto switch mounting bracket.
2. Put a hexagon socket head cap screw (M3 x 0.5 x 14 L) through the auto switch's through-hole (2 locations), and then push it down into the M3 tapped part on the auto switch mounting bracket while turning it lightly.
3. Place the concave part of the auto switch mounting bracket into the cylinder tie-rod, and slide the auto switch mounting bracket in order to set roughly to the detecting position.
4. After reconfirming the detecting position, tighten the M3 mounting screw to secure the auto switch by making the bottom face of auto switch attached to the cylinder tube. (Tightening torque of M3 screw should be 0.5 to 0.7 N·m.)
5. Tighten up M4 screw of auto switch mounting bracket to secure the auto switch mounting bracket. (Ensure that tightening torque of M4 screw should be set 1.0 to 1.2 N·m.)

Auto Switch Mounting Bracket Part No. (Including Bracket, Screw)

Cylinder series	Applicable bore size (mm)						
	32	**40**	**50**	**63**	**80**	**100**	**125**
C96	BMB3T -040	BMB3T -040	BMB3T -050	BMB3T -050	BMB3T -080	BMB3T -080	BAP2T -080

How to Mount and Move the Auto Switch 2

Mounting Bracket Tie-rod Mounting

<Applicable Auto Switch>

Solid state switch ··· D-F59, D-F5P
D-J59, D-J51, D-F5BAL
D-F59W, D-F5PW, D-J59W
D-F59F, D-F5NTL

Reed switch ····· D-A53, D-A54, D-A56, D-A64, D-A67
D-A59W

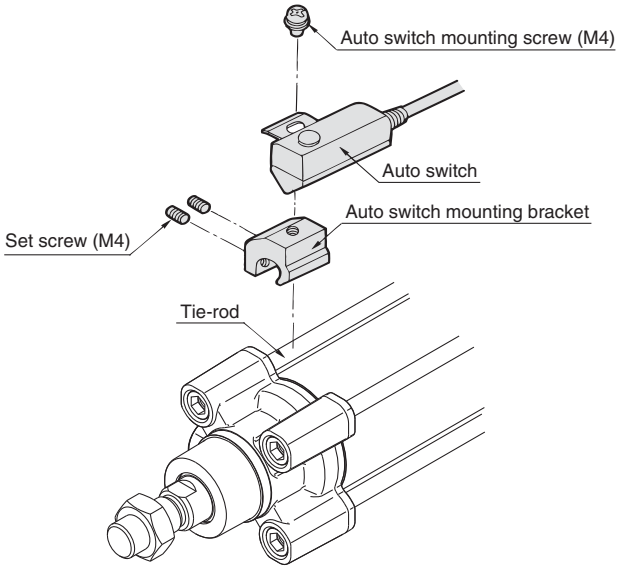

1. Fix the auto switch on the auto switch mounting bracket with the auto switch mounting screw (M4) and install the set screw.
2. Fit the auto switch mounting bracket into the cylinder tie-rod and then fix the auto switch at the detecting position with the hexagonal wrench. (Be sure to put the auto switch on the surface of cylinder tube.)
3. When changing the detecting position, loosen the set screw to move the auto switch and then re-fix the auto switch on the cylinder tube. (Tightening torque of M4 screw should be 1.0 to 1.2 N·m.)

Auto Switch Mounting Bracket Part No. (Including Bracket, Screw, Set Screw)

Cylinder series	Applicable bore size (mm)						
	32	**40**	**50**	**63**	**80**	**100**	**125**
C96	BT-03	BT-03	BT-05	BT-05	BT-06	BT-06	BT-08

[Mounting screws set made of stainless steel]
The following set of mounting screws made of stainless steel is also available. Use it in accordance with the operating environment.
(Please order the auto switch mounting bracket separately, since it is not included.)

BBA1: For D-A5/A6/F5/J5

"D-F5BAL" switch is set on the cylinder with the stainless steel screws above when shipped from factory.
When a switch is shipped independently, "BBA1" screws are attached.

Auto Switch Mounting Screw Set

Part no.	Contents				Applicable auto switch mounting bracket part no.	Applicable auto switch
	No.	Description	Size	Quantity		
BBA1	1	Auto switch mounting screw	M4 x 0.7 x 8L	1	BT-□□	D-A5, A6 D-F5, J5
	2	Set screw	M4 x 0.7 x 6L	2	BT-03, BT-04, BT-05 BT-06, BT-08, BT-12	D-A5, A6 D-F5, J5
					BA4-040, BA4-063, BA4-080 BMB4-032, BMB4-050	D-Z7, Z8 D-Y5, Y6, Y7
					BMB5-032 BA7-040, BA7-063, BA7-080	D-A9 D-M9
	3	Set screw	M4 x 0.7 x 8L	2	BT-16, BT-18A, BT-20	D-A5, A6 D-F5, J5
					BS4-125, BS4-160 BS4-180, BS4-200	D-Z7, Z8 D-Y5, Y6, Y7
					BS5-125, BS5-160 BS5-180, BS5-200	D-A9 D-M9

Series CP96/C96
Simple Specials 1

These changes are dealt with Simple Specials System.

1 Change of Rod End Shape

Symbol
-XA0 to XA30

Applicable Series

Series	Description	Model	Action	Symbol for change of rod end shape
C96	Standard type	C96S	Double acting, Single rod	XA0 to 30
		C96SW	Double acting, Double rod	XA0 to 30
	Smooth type	C96Y	Double acting, Single rod	XA0 to 30
CP96	Standard type	CP96S	Double acting, Single rod	XA0 to 30
		CP96SW	Double acting, Double rod	XA0 to 30

⚠ Precautions

1. SMC will make appropriate arrangements if no dimension, tolerance, or finish instructions are given in the diagram.
2. Standard dimensions marked with "∗" will be as follows to the rod diameter (D). Enter any special dimension you desire.
   D ≤ 6 → D – 1 mm, 6 < D ≤ 25 → D – 2 mm, D > 25 → D – 4 mm
3. In the case of double rod type and single acting retraction type, enter the dimensions when the rod is retracted.
4. Only the single side of a double rod is able to manufacture.

Symbol : A0

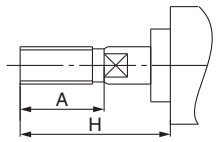

Symbol : A1

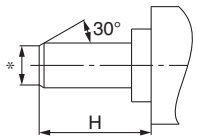

Symbol : A2

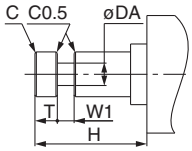

Symbol : A3

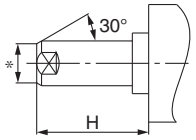

Symbol : A4

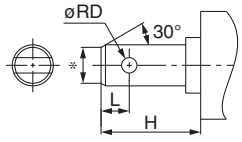

Symbol : A5

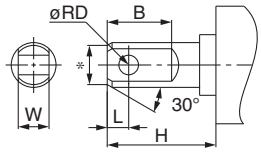

Symbol : A6

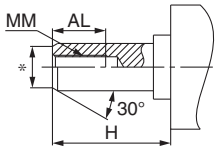

Symbol : A7

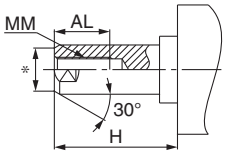

Symbol : A8

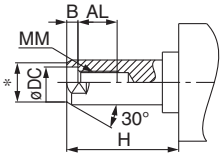

Symbol : A9

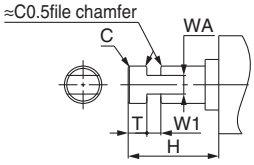

Symbol : A10

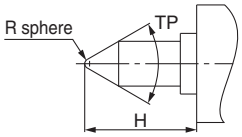

Symbol : A11

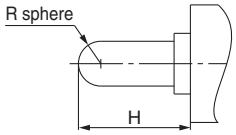

Symbol : A12

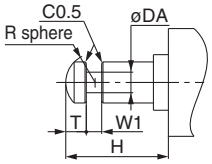

Symbol : A13

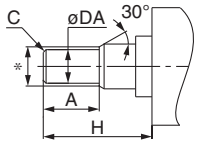

Symbol : A14

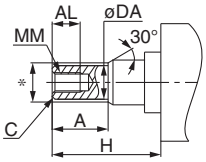

Symbol : A15

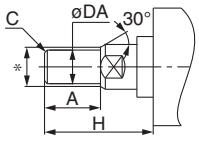

Symbol : A16

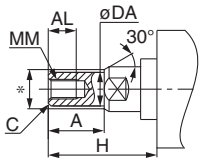

Symbol : A17

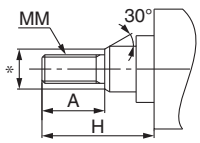

Symbol : A18

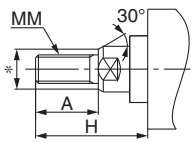

Symbol : A19

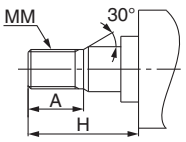

Symbol : A20

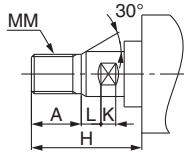

Symbol : A21

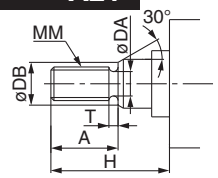

Symbol : A22

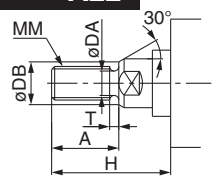

Symbol : A23

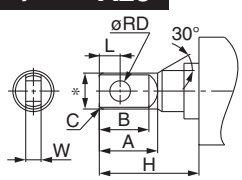

Symbol : A24

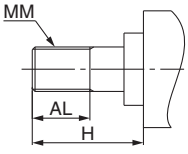

Symbol : A25

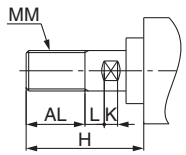

Symbol : A26

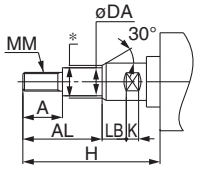

Symbol : A27

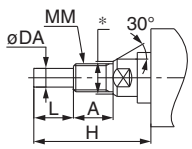

Symbol : A28

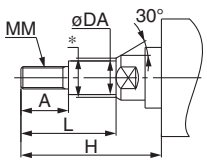

Symbol : A29

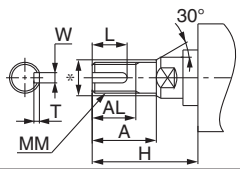

Symbol : A30

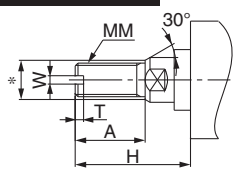

Simple Specials 2

-XC14: Change of Trunnion Bracket Mounting Position

These changes are dealt with Simple Specials System.

Symbol

2 Change of Trunnion Bracket Mounting Position -XC14

The position for mounting the trunnion pivot bracket on the cylinder can be moved from the standard mounting position to any desired position.

Applicable Series

Series	Description	Model	Action	Note
C96	Standard type	**C96**	Double acting, Single rod	
		C96W	Double acting, Double rod	

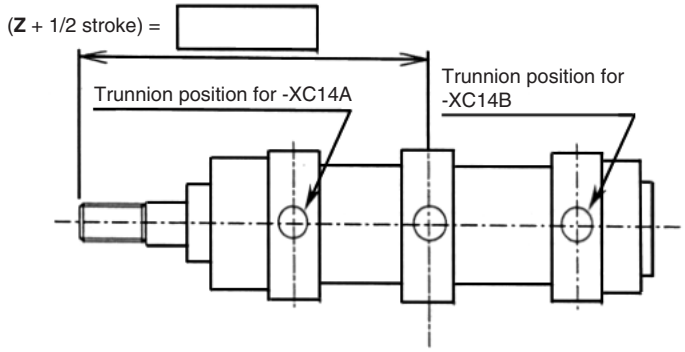

⚠ Precautions

1. Specify "Z + 1/2 stroke" in the case the trunnion bracket position is not -XC14A, B or trunnion is not a center trunnion.
2. SMC will make appropriate arrangements if no dimension, tolerance, or finish instructions are given in the diagram.
3. The possible range of trunnion bracket mounting position is indicated in the table below.
4. Some trunnion mounting positions do not allow auto switch mounting. Please consult with SMC for more information.

Series C96

(mm)

Symbol / Bore size	Trunnion bracket position			
	For -XC14		Reference : Standard (Centre trunnion)	Minimum stroke
	Minimum	Maximum		
32	89	101 + stroke	95 + 0.5 stroke	0
40	103	110 + stroke	106.5 + 0.5 stroke	
50	118	126 + stroke	122 + 0.5 stroke	
63	128.5	130.5 + stroke	129.5 + 0.5 stroke	
80	148.5	151.5 + stroke	150 + 0.5 stroke	
100	161.5	158.5 + stroke	160 + 0.5 stroke	5
125	202.5	195.5 + stroke	199 + 0.5 stroke	10

Made to Order Specifications 1

Contact SMC for detailed dimensions, specifications, and lead times.

Made to Order

Symbol **-XB6**

3 Heat Resistant Cylinder (–10 to 150°C)

Air cylinder which changed the seal material and grease, so that it could be used even at higher temperature up to 150 from –10°C.

Applicable Series

Series	Description	Model	Action	Note	Page (for std. model)
CP96	Air cylinder	CP96S	Double acting, Single rod		Page 4
		CP96SW	Double acting, Double rod		
C96	Air cylinder	C96S	Double acting, Single rod		Page 26
		C96SW	Double acting, Double rod		

Note 1) Operate without lubrication from a pneumatic system lubricator.
Note 2) Please contact SMC for details on the maintenance intervals for this cylinder, which differ from those of the standard cylinder.
Note 3) In principle, it is impossible to make built-in magnet type and the one with auto switch. But, as for the one with auto switch, and the heat resistant cylinder with heat resistant auto switch, since it will be differed depending on the series, please contact SMC.
Note 4) Piston speed is ranged from 50 to 500 mm/s.

How to Order

Standard model no. **–XB6**

Heat resistant cylinder

Specifications

Ambient temperature range	–10 to 150°C
Seals materials	Fluororubber
Grease	Heat resistant grease
Specifications other than above and external dimensions	Same as standard type

⚠ Warning

Precautions

Be aware that smoking cigarettes, etc. after your hands have come into contact with the grease used in this cylinder can create a gas that is hazardous to humans.

Symbol **-XB7**

4 Cold Resistant Cylinder (–40 to 70°C)

Air cylinder which changed the seal material and grease, so that it could be used even at lower temperature down to –40°C.

Applicable Series

Series	Description	Model	Action	Note	Page (for std. model)
C96	Air cylinder	C96S	Double acting, Single rod	Except with switch, Mounting bracket is available with basic only, Minimum operating pressure 0.2 MPa	Page 26

Note 1) Operate without lubrication from a pneumatic system lubricator.
Note 2) Use dry air which is suitable for heatless air dryer, etc. not to cause the moisture to be frozen.
Note 3) Please contact SMC for details on the maintenance intervals for this cylinder, which differ from those of the standard cylinder.
Note 4) Mounting auto switch is impossible.

How to Order

Standard model no. **–XB7**

Cold resistant cylinder

Specifications

Ambient temperature range	–40 to 70°C
Seals material	Low nitrile rubber
Grease	Cold resistant grease
Auto switch	Not mountable
Dimensions	Same as standard type
Additional specifications	Same as standard type

⚠ Warning

Precautions

Be aware that smoking cigarettes, etc. after your hands have come into contact with the grease used in this cylinder can create a gas that is hazardous to humans.

Made to Order Specifications 2

Contact SMC for detailed dimensions, specifications, and lead times.

Made to Order

Symbol **-XC4**

5 With Heavy Duty Scraper

It is suitable for using cylinders under the environment, where there are much dusts in a surrounding area by using a heavy duty scraper on the wiper ring, or using cylinders under earth and sand exposed to the die-castied equipment, construction machinery, or industrial vehicles.

Applicable Series

Series	Description	Model	Action	Note	Page (for std. model)
CP96	Air cylinder	CP96S	Double acting, Single rod	ø32 to ø100	Page 4
		CP96SW	Double acting, Double rod	ø32 to ø100	
C96	Air cylinder	C96S	Double acting, Single rod	ø32 to ø100	Page 26
		C96SW	Double acting, Double rod	ø32 to ø100	

How to Order

Standard model no. −XC4

With heavy duty scraper (SCB scraper)

Specifications: Same as standard type.
Dimensions: Same as standard type.

⚠Caution

Do not replace heavy duty scrapers.

• Since heavy duty scrapers are press-fit, do not replace the cover only, but rather the entire rod cover assembly.

Symbol **-XC7**

6 Tie-rod, Cushion Valve, Tie-rod Nut, etc. Made of Stainless Steel

When using in locations where the rust generation or corrosion likelihood exists, the standard parts material have been partly changed to the stainless steel.

Applicable Series

Series	Description	Model	Action	Page (for std model)
CP96	Air cylinder	CP96S	Double acting, Single rod	Page 4
		CP96SW	Double acting, Double rod	
C96	Air cylinder	C96S	Double acting, Single rod	Page 26
		C96SW	Double acting, Double rod	

How to Order

Standard model no. −XC7

Tie-rod, cushion valve, tie-rod nut, etc. made of stainless steel

Specifications

Component parts changed to stainless steel	Tie-rod, Tie-rod nut, Mounting bracket nut, Spring washer, Cushion valve, Lock nut
Additional specifications	Same as standard type
Dimensions	Same as standard type

Symbol

7 Dual Stroke Cylinder/Double Rod Type -XC10

Two cylinders are constructed as one cylinder in a back-to-back configuration allowing the cylinder stroke to be controlled in three steps.

Applicable Series

Series	Description	Model	Action	Note	Page (for std. model)
CP96	Air cylinder	CP96S	Double acting, Single rod	Except clevis and trunnion styles	Page 4
C96	Air cylinder	C96S	Double acting, Single rod	Except clevis and trunnion styles	Page 26

How to Order

CP96S / C96S | Mounting style | Bore size | − | Stroke A | + | Stroke B | − | XC10

XC10: Dual stroke cylinder

Specifications

Series	Bore size (mm)	Maximum manufacturable stroke (mm)
CP96	32 to 125	1000
C96		

Function

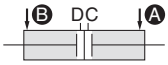

When air pressure is supplied to ports A and B, both A and B strokes retract.

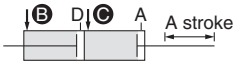

When air pressure is supplied to ports B and C, A out strokes.

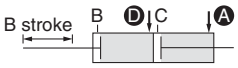

When air pressure is supplied to ports A and D, B out strokes.

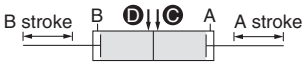

When air pressure is supplied to ports C and D, both strokes A and B out strokes.

Dimensions (Dimensions other than below are the same as standard type.)

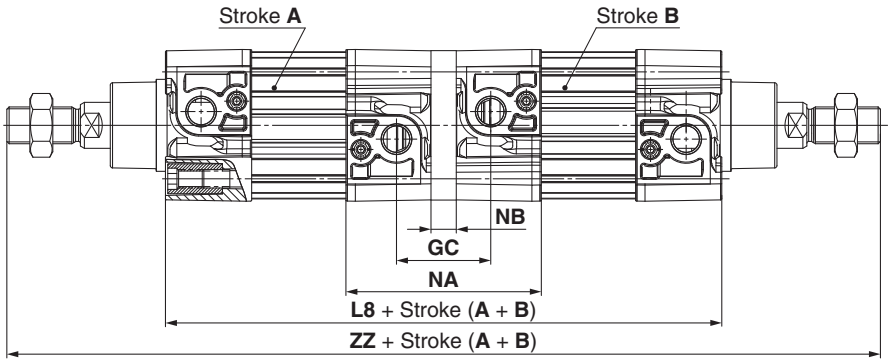

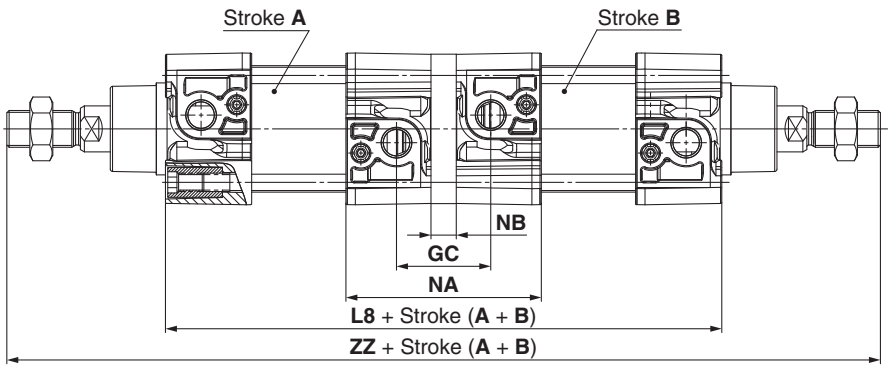

Bore size (mm)	L8	ZZ	NA	NB	GC
ø**32**	198	294	74	10	36
ø**40**	220	328	85	10	38
ø**50**	222	360	85	10	41
ø**63**	252	390	100	10	43
ø**80**	270	442	104	14	52
ø**100**	290	472	114	14	52
ø**125**	334	572	130	14	52

Made to Order Specifications 3

Contact SMC for detailed dimensions, specifications, and lead times.

Made to Order

8 Dual Stroke Cylinder/Single Rod Type

Symbol **-XC11**

Two cylinders can be integrated by connecting them in line, and the cylinder stroke can be controlled in two stages in both directions.

Applicable Series

Series	Description	Model	Action	Note	Page (for std. model)
CP96	Air cylinder	CP96S	Double acting, Single rod	Except trunnion style	Page 4
C96	Air cylinder	C96S	Double acting, Single rod	Except trunnion style	Page 26

How to Order

CP96S / C96S [Mounting style] [Bore size] – [Stroke A] + [Stroke B-A] – **XC11**

XC11: Dual stroke cylinder/Single rod type

Specifications: Same as standard type.

Function

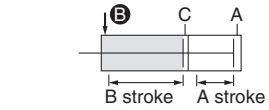

When air pressure is supplied to the port B, both A and B stokes retract.

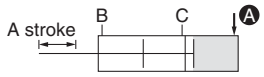

When air pressure is supplied from port A, the rod operates for A stroke.

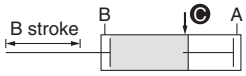

When air pressure is supplied from port C, the rod operates for B stroke.

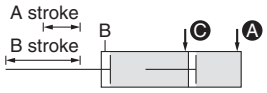

When air pressure is supplied from ports A and C, the output force is doubled in the A stroke.

Precautions

⚠ Caution

1. **Do not supply air until the cylinder is fixed with the attached bolt.**
2. **If air is supplied without securing the cylinder, the cylinder could lurch, posing the risk of bodily injury or damage to the peripheral equipment.**

Dimensions (Dimensions other than below are the same as standard type.)

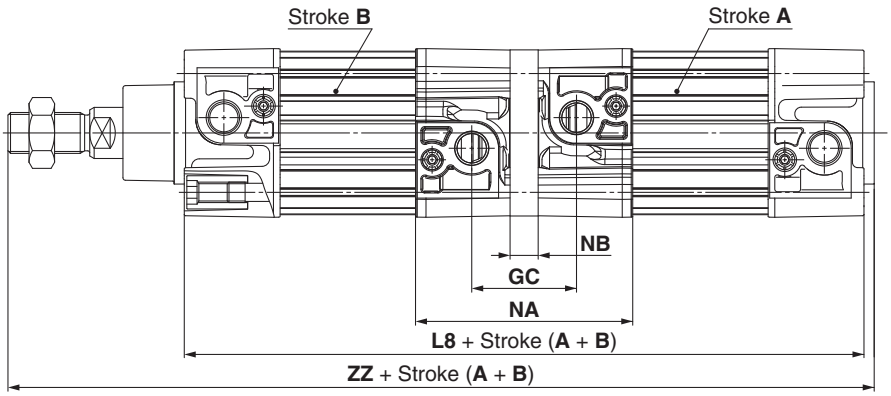

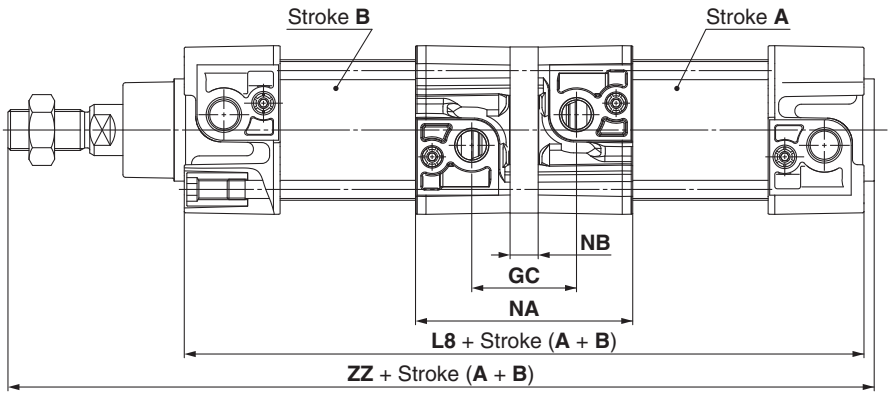

Bore size (mm)	L8	ZZ	NA	NB	GC
ø**32**	199	251	74	10	36
ø**40**	221	279	85	10	38
ø**50**	223	296	85	10	41
ø**63**	253	326	100	10	43
ø**80**	271	361	104	14	52
ø**100**	291	386	114	14	52
ø**125**	335	460	130	14	52

Symbol

9 Fluororubber Seals -XC22

Applicable Series

Series	Description	Model	Action	Note	Page (for std. model)
CP96	Air cylinder	CP96S	Double acting, Single rod		Page 4
		CP96SW	Double acting, Double rod		
C96	Air cylinder	C96S	Double acting, Single rod		Page 26
		C96SW	Double acting, Double rod		

How to Order

Standard model no. – **XC22**

Fluororubber seals

Note 1) Please confirm with SMC, as the type of chemical and the operating temperature may not allow the use of this product.
Note 2) Cylinders with auto switches can also be produced;
however, auto switch related parts (auto switch units, mounting brackets, built-in magnets) are the same as standard products. Before using these, please contact SMC regarding their suitability for the operating environment.

Specifications

Seal material	Fluororubber
Ambient temperature range	With auto switch : –10 to 60°C (No freezing) Note1) Without auto switch : –10 to 70°C (No freezing)
Specifications other than above and external dimensions	Same as standard type for each series

Symbol

10 With Coil Scraper -XC35

It gets rid of frost, ice, weld spatter, cutting chips adhered to the piston rod, and protects the seals, etc.

Applicable Series

Series	Description	Model	Action	Note	Page (for std. model)
CP96	Air cylinder	CP96S	Double acting, Single rod	ø32 to ø100	Page 4
		CP96SW	Double acting, Double rod	ø32 to ø100	
C96	Air cylinder	C96S	Double acting, Single rod	ø32 to ø100	Page 26
		C96SW	Double acting, Double rod	ø32 to ø100	

How to Order

Standard model no. – **XC35**

With coil scraper

Specifications: Same as standard type.
Dimensions: Same as standard type.

Made to Order Specifications 4

Contact SMC for detailed dimensions, specifications, and lead times.

Made to Order

11 Made of Stainless Steel (With Hard Chrome Plated Piston Rod)

Symbol **-XC68**

Applicable for uses where rust and corrosion are expected, such as by immersing in water.

Applicable Series

Series	Description	Model	Action	Page (for std. model)
CP96	Air cylinder	CP96S	Double acting, Single rod	Page 4
		CP96SW	Double acting, Double rod	
C96	Air cylinder	C96S	Double acting, Single rod	Page 26
		C96SW	Double acting, Double rod	

Note) There is a maximum stroke limit for C (P) 96 cylinder.

Maximum Stroke

(mm)

Series	Double acting, Single rod	Double acting, Double rod
CP96	ø32 : 1800 ø40 to ø100 : 1700 ø125 : 1600	1000 (Same as standard type)
C96	ø32 : 1000 ø40 to ø100 : 1700 ø125 : 1600	1000 (Same as standard type)

Specifications

Parts changed to stainless steel	Piston rod, Rod end nut
Other specifications and dimensions	Same as standard type

How to Order

Standard model no. – XC68

Made of stainless steel
(With hard chrome plated piston rod)

Actuators Precautions 1

Be sure to read this before handling.

Design and Selection

⚠ Warning

1. There is a danger of sudden action by air cylinders if sliding parts of machinery are twisted, etc., and changes in forces occur.

In such cases, human injury may occur; e.g., by catching hands or feet in the machinery, or damage to the machinery itself may occur. Therefore, the machine should be designed to avoid such dangers.

2. Install a protective cover when there is a risk of human injury

If a driven object and moving parts of a cylinder pose a danger of human injury, design the structure to avoid contact with the human body.

3. Securely tighten all stationary parts and connected parts so that they will not become loose.

Especially when a cylinder operates with high frequency or is installed where there is a lot of vibration, ensure that all parts remain secure.

4. A deceleration circuit may be required.

When a driven object is operated at high speed or the load is heavy, a cylinder's cushion will not be sufficient to absorb the impact. Install a deceleration circuit to reduce the speed before cushioning to relieve the impact. In this case, the rigidity of the machinery should also be examined.

5. Consider a possible drop in operating pressure due to a power outage, etc.

When a cylinder is used in a clamping mechanism, there is a danger of work pieces dropping if there is a decrease in clamping force due to a drop in circuit pressure caused by a power outage, etc. Therefore, safety equipment should be installed to prevent damage to machinery and/or human injury. Suspension mechanisms and lifting devices also require consideration for drop prevention.

6. Consider a possible loss of power source.

Measures should be taken to protect against human injury and equipment damage in the event that there is a loss of power to equipment controlled by air pressure, electricity or hydraulics, etc.

7. Design circuitry to prevent sudden lurching of driven objects.

When a cylinder is driven by an exhaust centre type directional control valve or when starting up after residual pressure is exhausted from the circuit, etc., the piston and its driven object will lurch at high speed if pressure is applied to one side of the cylinder because of the absence of air pressure inside the cylinder. Therefore, select equipment and design circuits to prevent sudden lurching, because there is a danger of human injury and/or damage to equipment when this occurs.

8. Consider emergency stops.

Design so that human injury and/or damage to machinery and equipment will not be caused when machinery is stopped by a safety device under abnormal conditions, such as a power outage or a manual emergency stop.

9. Consider the action when operation is restarted after an emergency stop or abnormal stop.

Design the machinery so that human injury or equipment damage will not occur upon restart of operation. When the cylinder has to be reset at the starting position, install safe manual control equipment.

⚠ Warning

10. Confirm the specifications.

The products advertised in this catalogue are designed according to use in industrial compressed air systems. If the products are used in conditions where pressure, temperature, etc., are out of specification, damage and/or malfunction may be caused. Do not use in these conditions. (Refer to the specifications.)

Consult SMC if you use a fluid other than compressed air.

11. Intermediate stops

When intermediate stopping of a cylinder piston is performed with a 3 position closed centre type directional control valve, it is difficult to achieve stopping positions as accurate and precise as with hydraulic pressure due to the compressibility of air.

Furthermore, since valves and cylinders, etc., are not guaranteed for zero air leakage, it may not be possible to hold a stopped position for an extended period of time. Contact SMC in case it is necessary to hold a stopped position for an extended period.

⚠ Caution

1. Operate within the limits of the maximum usable stroke.

The piston rod will be damaged if operated beyond the maximum stroke. Refer to the air cylinder model selection procedure for the maximum usable stroke.

2. Operate the piston within a range such that collision damage will not occur at the stroke end.

Operate within a range such that damage will not occur when the piston having inertial force stops by striking the cover at the stroke end. Refer to the cylinder model selection procedure for the range within which damage will not occur.

3. Use a speed controller to adjust the cylinder drive speed, gradually increasing from a low speed to the desired speed setting.

4. Provide intermediate supports for long stroke cylinders.

Provide intermediate supports for cylinders with long strokes to prevent rod damage due to sagging of the rod, deflection of the tube, vibration and external loads, etc.

It is assumed the persons determining the stroke requirements have technical training and expertise in the design limitations of pneumatic equipment and are aware that death, personal injury, and property damage may result from the improper use of these products. Proper use is the users responsibilty.

Actuators Precautions 2

Be sure to read this before handling.

Mounting

⚠Caution

1. **Be certain to align the rod axis with the load and direction of movement when connecting.**
   When not properly aligned, the rod and tube may be twisted, and damage may be caused due to wear on areas such as the inner tube surface, bushings, rod surface and seals.
2. **When an external guide is used, connect the rod end and the load in such a way that there is no interference at any point within the stroke.**
3. **Do not scratch or gouge the sliding parts of the cylinder tube or piston rod, etc., by striking or grasping them with other objects.**
   Cylinder bores are manufactured to precise tolerances, so that even a slight deformation may cause malfunction. Also, scratches or gouges, etc., in the piston rod may lead to damaged seals and cause air leakage.
4. **Prevent the seizure of rotating parts.**
   Prevent the seizure of rotating parts (pins, etc.) by applying grease.
5. **Do not use until you can verify that equipment can operate properly.**
   Verify correct mounting by appropriate function and leakage inspections after compressed air and power are connected following mounting, maintenance or conversions.
6. **Operating manual**
   The product should be mounted and operated after thoroughly reading the manual and understanding its contents.
   Keep the operating manual where it can be referred to as needed.
7. **Preparation before piping**
   Before piping is connected, it should be thoroughly blown out with air (flushing) or washed to remove chips, cutting oil and other debris from inside the pipe.
8. **Wrapping of pipe tape**
   When screwing together pipes and fittings, etc., be certain that chips from the pipe threads and sealing material do not get inside the piping.
   Also, when pipe tape is used, leave 1.5 to 2 thread ridges exposed at the end of the threads.

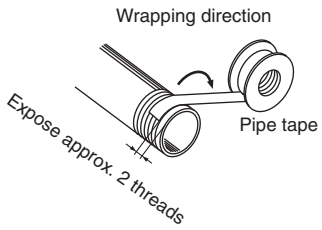

Cushion

⚠Caution

1. **Readjust using the cushion needle.**
   Cushion is adjusted at the factory, however, the cushion needle on the cover should be readjusted when the product is put into service, based upon factors such as the size of the load and the operating speed. When the cushion needle is turned clockwise, the restriction becomes smaller and the cushion's effectiveness is increased. Tighten the lock nut securely after adjustment is performed.
2. **Do not operate with the cushion needle in a fully closed condition.**
   This will cause damage to the seals.

⚠Warning

1. **Use clean air.**
   Do not use compressed air which includes chemicals, synthetic oils containing organic solvents, salt or corrosive gases, etc., as it can cause damage or malfunction.

⚠Caution

1. **Install air filters.**
   Install air filters at the upstream side of valves. The filtration degree should be 5 μm or finer.
2. **Install an after-cooler, air dryer or water separator, etc.**
   Air that includes excessive drainage may cause malfunction of valves and other pneumatic equipment. To prevent this, install an after-cooler, air dryer or water separator, etc.
3. **Use the product within the specified range of fluid and ambient temperature.**
   Take measures to prevent freezing, since moisture in circuits can be frozen below 5°C, and this may cause damage to seals and lead to malfunction.

Maintenance

⚠Warning

1. **Removal of equipment, and supply/exhaust of compressed air.**
   When equipment is removed, first check measures to prevent dropping of driven objects and run-away of equipment, etc. Then, cut off the supply pressure and electric power, and exhaust all compressed air from the system.
   When machinery is restarted, proceed with caution after confirming measures to prevent cylinder from lurching.

⚠Caution

1. **Drain flushing**
   Remove drainage from air filters regularly. (Refer to the specifications.)

Auto Switches Precautions 1

Be sure to read this before handling.

Design / Selection

⚠Warning

1. Confirm the specifications.

Read the specifications carefully and use this product appropriately. The product may be damaged or malfunction if it is used outside the specification range for current load, voltage, temperature or impact.
We do not guarantee against any damage if the product is used outside of the specification range.

2. Cautions for use in an interlock circuit

When an auto switch is used for an interlock signal requiring high reliability, devise a double interlock system to avoid trouble by providing a mechanical protection function, or by also using another switch (sensor) together with the auto switch.
Also, perform periodic maintenance and confirm proper operation.

3. Do not make any modifications (including exchanging the printed circuit boards) to the product.

It may cause human injuries and accidents.

⚠Caution

1. Pay attention to the length of time that a switch is ON at an intermediate stroke position.

When an auto switch is placed at an intermediate position of the stroke and a load is driven at the time the piston passes, the auto switch will operate, but if the speed is too great the operating time will be shortened and the load may not operate properly. The maximum detectable piston speed is:

$$V\ (mm/s) = \frac{\text{Auto switch operating range (mm)}}{\text{Time load applied (ms)}} \times 1000$$

In cases of high piston speed, the use of an auto switch (D-F5NTL, F7NTL, G5NTL, M5NTL, M5PTL) with a built-in OFF delay timer (200 ms) makes it possible to extend the load operating time.
The wide-range detection type D-G5NBL (operating range 35 to 50 mm) may also be useful, depending on the application. Please consult with SMC for other models.

2. Keep wiring as short as possible.

<Reed>

As the length of the wiring to a load gets longer, the rush current at switching ON becomes greater, and this may shorten the product's life. (The switch will stay ON all the time.)

1) Use a contact protection box when the wire length is 5 m or longer.
2) Even if an auto switch has a built-in contact protection circuit, when the wiring is more than 30 m long, it is not able to adequately absorb the rush current and its life may be reduced. It is again necessary to connect a contact protection box in order to extend its life. Please consult with SMC in this case.

⚠Caution

<Solid state>

3) Although wire length should not affect switch function, use a wire 100 m or shorter.
If the wiring is longer it will likely increase noise although the length is less than 100 m.
When the wire length is long, we recommend the ferrite core is attached to the both ends of the lead wire to prevent excess noise.

A contact protection box is not necessary for solid state switches due to the nature of this product construction.

3. Do not use a load that generates surge voltage. If a surge voltage is generated, the discharge occurs at the contact, possibly resulting in the shortening of product life.

If driving a load such as a relay that generates a surge voltage,

<Reed>

Use an auto switch with built-in contact protection circuit or use a contact protection box.

<Solid state>

Use a built-in surge absorbing element type device.

4. Take precautions when multiple cylinders/actuators are used close together.

When multiple auto switch cylinders/actuators are used in close proximity, magnetic field interference may cause the auto switches to malfunction. Maintain a minimum cylinder separation of 40 mm. (When the allowable interval is specified for each cylinder series, use the indicated value.)
The auto switches may malfunction due to the interference from the magnetic fields.
Use of a magnetic screen plate (MU-S025) or commercially available magnetic screen tape can reduce the interference of magnetic force.

5. Pay attention to the internal voltage drop of the auto switch.

<Reed>

1) Auto switch with an indicator light (Except D-A56, A76H, A96, A96V, C76, E76A, Z76)
   - If auto switches are connected in series as shown below, take note that there will be a large voltage drop because of internal resistance in the light emitting diodes. (Refer to the internal voltage drop in the auto switch specifications.) [The voltage drop will be "n" times larger when "n" auto switches are connected.]
     Even though an auto switch operates normally, the load may not operate.

   - In the same way, when operating under a specified voltage, although an auto switch may operate normally, the load may not operate. Therefore, the formula below should be satisfied after confirming the minimum operating voltage of the load.

$$\text{Supply voltage} - \text{Internal voltage drop of auto switch} > \text{Minimum operating voltage of load}$$

Auto Switches Precautions 2

Be sure to read this before handling.

Design / Selection

⚠Caution

2) If the internal resistance of a light emitting diode causes a problem, select an auto switch without an indicator light (D-A6□, A80, A80H, A90, A90V, C80, R80, 90, E80A, Z80).

<Solid state/2-wire type>

3) Generally, the internal voltage drop will be greater with a 2-wire solid state auto switch than with a reed auto switch. Take the same precautions as in 1).
Also, take note that a 12 VDC relay is not applicable.

6. Pay attention to leakage current.

<Solid state/2-wire type>

Current (leakage current) flows to the load to operate the internal circuit when in the OFF state.

Operating current of load (OFF condition) > Leakage current

If the criteria given in the above formula are not met, it will not reset correctly (stays ON). Use a 3-wire auto switch if this specification will not be satisfied.
Moreover, leakage current flow to the load will be "n" times larger when "n" auto switches are connected in parallel.

7. Ensure sufficient clearance for maintenance activities.

When designing an application, be certain to allow sufficient clearance for maintenance.

8. When multiple auto switches are required.

"n" indicates the number of auto switches which can be physically mounted on the cylinders/actuators. Detection intervals depends on the auto switch mounting structure and set position, therefore some required interval and set positions may not be available.

9. Limitations of detectable positioning

When using certain mounting brackets, the surface and position where an auto switch can be mounted maybe restricted due to physical interference. For example, when using some bracket types the auto switch cannot be surface mounted at the bottom side of foot bracket, etc.
Select the set position of the auto switch so that it does not interfere with the mounting bracket of the cylinders/actuators (such as trunnion or reinforcement ring).

10. Use the cylinder and auto switch in proper combination.

The auto switch is pre-adjusted to activate properly for an auto-switch-capable SMC cylinder/actuator.
If the auto switch is mounted improperly, used for another brand of cylinders/actuators or used after the alternation of the machine installation, the auto switch may not activate properly.

Mounting / Adjustment

⚠Caution

1. Do not drop or bump.

Do not drop, bump or apply excessive impacts (300 m/s^2 or more for reed auto switches and 1000 m/s^2 or more for solid state auto switches) while handling. Although the body of the auto switch may not be damaged, the inside of the auto switch could be damaged and cause malfunction.

2. Observe the proper tightening torque for mounting an auto switch.

When an auto switch is tightened beyond the range of tightening torque, auto switch mounting screws, auto switch mounting brackets or auto switch may be damaged.
On the other hand, tightening below the range of tightening torque may allow the auto switch to slip out of position.

3. Do not carry a cylinder by the auto switch lead wires.

Never carry a cylinder by its lead wires. This may not only cause broken lead wires, but it may cause internal elements of the auto switch to be damaged by the stress.

4. Fix the auto switch with appropriate screw installed on the switch body. If using other screws, auto switch may be damaged.

5. Mount an auto switch at the centre of the operating range. In the case of 2-colour display auto switch, mount it at the centre of the green LED illuminating range.

Adjust the mounting position of the auto switch so that the piston stops at the centre of the operating range. (The mounting position shown in the catalogue indicates the optimum position at stroke end.)
If mounted at the end of the operating range (around the borderline of ON and OFF), operation will be unstable depending on the operating environment. Also there are some cylinders or actuators with individual setting methods for auto switches. If so, mount it in accordance with the indicated method.

Even if 2-colour indication solid state auto switches are fixed at a proper operating range (the green light lights up), the operation may become unstable depending on the installation environment or magnetic field disturbance.
(Magnetic body, external magnetic field, proximal installation of cylinders with built-in magnet and actuators, temperature change, other factors for magnetic force fluctuation during operation, etc.)

Auto Switches Precautions 3

Be sure to read this before handling.

Wiring

⚠Caution

1. Confirm proper insulation of wiring.

Be certain that there is no faulty wiring insulation (contact with other circuits, ground fault, improper insulation between terminals, etc.). Damage may occur due to excess current flow into a switch.

2. Do not wire with power lines or high voltage lines.

Wire separately from power lines or high voltage lines, avoiding parallel wiring or wiring in the same conduit with these lines. Control circuits containing auto switches may malfunction due to noise from these other lines.

3. Avoid repeatedly bending or stretching lead wires.

Broken lead wires will result from repeatedly applying bending stress or stretching force to the lead wires.
Stress and tensile force applied to the connection between the lead wire and auto switch increases the possibility of disconnection.
Keep the lead wire from moving especially in the area where it connects with the auto switch.

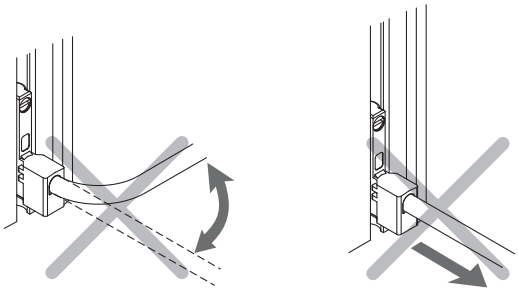

4. Be certain to connect the load before power is applied.

<2-wire type>

If the power is turned ON when an auto switch is not connected to a load, the auto switch will be instantly damaged because of excess current (short circuit).
It is the same as when the 2-wire brown lead wire (+, output) is directly connected to the (+) power supply terminal.

5. Do not allow short-circuit of loads.

<Reed>

If the power is turned ON with a load in a short circuited condition, the auto switch will be instantly damaged because of excess current flow into the switch.

<Solid state>

All models of D-J51, G5NB and PNP output type auto switches do not have built-in short circuit protection circuits.
If a load is short circuited, the auto switch will be instantly damaged as in the case of reed auto switches.
Take special care to avoid reverse wiring with the brown power supply line and the black output line on 3-wire type auto switches.

6. Avoid incorrect wiring.

<Reed>

A 24 VDC auto switch with indicator light has polarity. The brown lead wire or terminal No. 1 is (+), and the blue lead wire or terminal No. 2 is (–).

[For D-97, (+) is on the no-displayed side, (–) is on the black line side.]

1) If connections are reversed, an auto switch will operate, however, the light emitting diode will not light up.
Also, take note that a current greater than that specified will damage a light emitting diode and it will no longer operate.
Applicable model:
D-A73, A73H, A73C, C73, C73C, E73A, Z73
D-R73, R73C, 97, 93A, A93, A93V
D-A33, A34, A33A, A34A, A44, A44A
D-A53, A54, B53, B54

2) When using a 2-colour indicator type auto switch (D-A79W, A59W and B59W), the auto switch will constantly remain ON if the connections are reversed.

<Solid state>

1) If connections are reversed on a 2-wire type auto switch, the auto switch will not be damaged if protected by a protection circuit, but the auto switch will always stay in an ON state. However, it is still necessary to avoid reversed connections, since the auto switch could be damaged by a load short circuit in this condition.

2) If connections are reversed (power supply line + and power supply line –) on a 3-wire type auto switch, the auto switch will be protected by a protection circuit. However, if the power supply line (+) is connected to the blue wire and the power supply line (–) is connected to the black wire, the auto switch will be damaged.

7. When the lead wire sheath is stripped, confirm the stripping direction. The insulator may be split or damaged depending on the direction. (D-M9□ only)

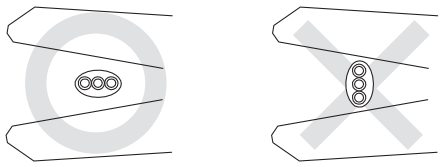

Recommended Tool

Description	Model
Wire stripper	D-M9N-SWY

∗ Stripper for a round cable (ø2.0) can be used for a 2-wire type cable.

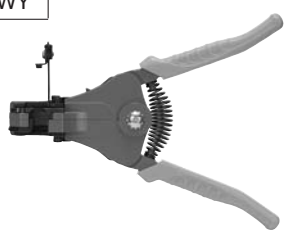

Auto Switches Precautions 4

Be sure to read this before handling.

Operating Environment

⚠Warning

1. Never use in an atmosphere of explosive gases.

The structure of auto switches is not intended to prevent explosion. Never use in an atmosphere with an explosive gas since this may cause a serious explosion.
Please contact SMC concerning ATEX compliant products.

⚠Caution

1. Do not use in an area where a magnetic field is generated.

Auto switches will malfunction or magnets inside cylinders/actuators will become demagnetised. (Please consult with SMC if a magnetic field resistant auto switch can be used.)

2. Do not use in an environment where the auto switch will be continually exposed to water.

Although auto switches satisfy IEC standard IP67 construction except some models (D-A3□, A44□, G39□, K39□, RNK, RPK) do not use auto switches in applications where continually exposed to water splash or spray. Poor insulation or swelling of the potting resin inside auto switches may cause malfunction.

3. Do not use in an environment with oil or chemicals.

Please consult with SMC if auto switches will be used in an environment with coolant, cleaning solvent, various oils or chemicals. If auto switches are used under these conditions for even a short time, they may be adversely affected by improper insulation, malfunction due to swelling of the potting resin, or hardening of the lead wires.

4. Do not use in an environment with temperature cycles.

Please consult with SMC if auto switches are used where there are temperature cycles other than normal temperature changes, as there may be adverse effects inside the auto switches.

5. Do not use in an environment where there is excessive impact shock.

<Reed>

When excessive impact (300 m/s^2 or more) is applied to a reed auto switch during operation, the contact point will malfunction and generate or cut off a signal momentarily (1 ms or less). Please consult with SMC if a solid state auto switch can be used according to the environment.

6. Do not use in an area where surges are generated.

<Solid state>

When there are units (solenoid type lifter, high frequency induction furnace, motor, radio equipment etc.) which generate a large amount of surge in the area around cylinders/actuators with solid state auto switches, this may cause deterioration or damage to the auto switch's internal circuit elements. Avoid sources of surge generation and disorganised lines.

⚠Caution

7. Avoid accumulation of iron waste or close contact with magnetic substances.

When a large amount of iron waste such as machining chips or spatter is accumulated, or a magnetic substance (something attracted by a magnet) is brought into close proximity with a cylinder with auto switches, or an actuator, it may cause the auto switch to malfunction due to a loss of the magnetic force inside the cylinder/actuator.

8. Please contact SMC concerning water resistance, elasticity of lead wires, usage at welding sites, etc.

9. Do not use in direct sunlight.

10. Do not mount the product in locations where it is exposed to radiant heat.

Maintenance

⚠Warning

1. Removal of equipment, and supply/exhaust of compressed air

Before any machinery or equipment is removed, first ensure that the appropriate measures are in place to prevent the fall or erratic movement of driven objects and equipment, then cut off the electric power and reduce the pressure in the system to zero. Only then should you proceed with the removal of any machinery and equipment.
When machinery is restarted, proceed with caution after confirming that appropriate measures are in place to prevent actuators from moving suddenly.

⚠Caution

1. Perform the following maintenance periodically in order to prevent possible danger due to unexpected auto switch malfunction.

1) Secure and tighten auto switch mounting screws.
If screws become loose or the mounting position is dislocated, retighten them after readjusting the mounting position.

2) Confirm that there is no damage to lead wires.
To prevent faulty insulation, replace auto switches or repair lead wires, etc., if damage is discovered.

3) Confirm the display of the green light on the 2-colour display auto switch.
Confirm that the piston stops at the centre of the operating range (the green LED is on). If the red LED is on, the mounting position is not appropriate.
Readjust to the centre of the operating range. Also there are some cylinders or actuators with individual setting methods for auto switches. If so, mount it in accordance with the indicated method.

⚠ Safety Instructions

These safety instructions are intended to prevent hazardous situations and/or equipment damage. These instructions indicate the level of potential hazard with the labels of **"Caution," "Warning"** or **"Danger."** They are all important notes for safety and must be followed in addition to International Standards (ISO/IEC)*1), and other safety regulations.

⚠ Caution: **Caution** indicates a hazard with a low level of risk which, if not avoided, could result in minor or moderate injury.

⚠ Warning: **Warning** indicates a hazard with a medium level of risk which, if not avoided, could result in death or serious injury.

⚠ Danger : **Danger** indicates a hazard with a high level of risk which, if not avoided, will result in death or serious injury.

*1) ISO 4414: Pneumatic fluid power – General rules relating to systems.
ISO 4413: Hydraulic fluid power – General rules relating to systems.
IEC 60204-1: Safety of machinery – Electrical equipment of machines. (Part 1: General requirements)
ISO 10218-1: Manipulating industrial robots - Safety.
etc.

⚠ Warning

1. **The compatibility of the product is the responsibility of the person who designs the equipment or decides its specifications.**
   Since the product specified here is used under various operating conditions, its compatibility with specific equipment must be decided by the person who designs the equipment or decides its specifications based on necessary analysis and test results. The expected performance and safety assurance of the equipment will be the responsibility of the person who has determined its compatibility with the product. This person should also continuously review all specifications of the product referring to its latest catalogue information, with a view to giving due consideration to any possibility of equipment failure when configuring the equipment.
2. **Only personnel with appropriate training should operate machinery and equipment.**
   The product specified here may become unsafe if handled incorrectly. The assembly, operation and maintenance of machines or equipment including our products must be performed by an operator who is appropriately trained and experienced.
3. **Do not service or attempt to remove product and machinery/equipment until safety is confirmed.**
   1. The inspection and maintenance of machinery/equipment should only be performed after measures to prevent falling or runaway of the driven objects have been confirmed.
   2. When the product is to be removed, confirm that the safety measures as mentioned above are implemented and the power from any appropriate source is cut, and read and understand the specific product precautions of all relevant products carefully.
   3. Before machinery/equipment is restarted, take measures to prevent unexpected operation and malfunction.
4. **Contact SMC beforehand and take special consideration of safety measures if the product is to be used in any of the following conditions.**
   1. Conditions and environments outside of the given specifications, or use outdoors or in a place exposed to direct sunlight.
   2. Installation on equipment in conjunction with atomic energy, railways, air navigation, space, shipping, vehicles, military, medical treatment, combustion and recreation, or equipment in contact with food and beverages, emergency stop circuits, clutch and brake circuits in press applications, safety equipment or other applications unsuitable for the standard specifications described in the product catalogue.
   3. An application which could have negative effects on people, property, or animals requiring special safety analysis.
   4. Use in an interlock circuit, which requires the provision of double interlock for possible failure by using a mechanical protective function, and periodical checks to confirm proper operation.

⚠ Caution

1. **The product is provided for use in manufacturing industries.**
   The product herein described is basically provided for peaceful use in manufacturing industries.
   If considering using the product in other industries, consult SMC beforehand and exchange specifications or a contract if necessary.
   If anything is unclear, contact your nearest sales branch.

Limited warranty and Disclaimer/ Compliance Requirements

The product used is subject to the following "Limited warranty and Disclaimer" and "Compliance Requirements".
Read and accept them before using the product.

Limited warranty and Disclaimer

1. The warranty period of the product is 1 year in service or 1.5 years after the product is delivered.*2)
   Also, the product may have specified durability, running distance or replacement parts. Please consult your nearest sales branch.
2. For any failure or damage reported within the warranty period which is clearly our responsibility, a replacement product or necessary parts will be provided.
   This limited warranty applies only to our product independently, and not to any other damage incurred due to the failure of the product.
3. Prior to using SMC products, please read and understand the warranty terms and disclaimers noted in the specified catalogue for the particular products.

*2) **Vacuum pads are excluded from this 1 year warranty.**
A vacuum pad is a consumable part, so it is warranted for a year after it is delivered.
Also, even within the warranty period, the wear of a product due to the use of the vacuum pad or failure due to the deterioration of rubber material are not covered by the limited warranty.

Compliance Requirements

1. The use of SMC products with production equipment for the manufacture of weapons of mass destruction (WMD) or any other weapon is strictly prohibited.
2. The exports of SMC products or technology from one country to another are governed by the relevant security laws and regulations of the countries involved in the transaction. Prior to the shipment of a SMC product to another country, assure that all local rules governing that export are known and followed.

⚠ Safety Instructions Be sure to read "Handling Precautions for SMC Products" (M-E03-3) before using.

SMC Corporation (Europe)

Austria	☎+43 (0)2262622800	www.smc.at	office@smc.at
Belgium	☎+32 (0)33551464	www.smcpneumatics.be	info@smcpneumatics.be
Bulgaria	☎+359 (0)2807670	www.smc.bg	office@smc.bg
Croatia	☎+385 (0)13707288	www.smc.hr	office@smc.hr
Czech Republic	☎+420 541424611	www.smc.cz	office@smc.cz
Denmark	☎+45 70252900	www.smcdk.com	smc@smcdk.com
Estonia	☎+372 6510370	www.smcpneumatics.ee	smc@smcpneumatics.ee
Finland	☎+358 207513513	www.smc.fi	smcfi@smc.fi
France	☎+33 (0)164761000	www.smc-france.fr	promotion@smc-france.fr
Germany	☎+49 (0)61034020	www.smc-pneumatik.de	info@smc-pneumatik.de
Greece	☎+30 210 2717265	www.smchellas.gr	sales@smchellas.gr
Hungary	☎+36 23511390	www.smc.hu	office@smc.hu
Ireland	☎+353 (0)14039000	www.smcpneumatics.ie	sales@smcpneumatics.ie
Italy	☎+39 0292711	www.smcitalia.it	mailbox@smcitalia.it
Latvia	☎+371 67817700	www.smclv.lv	info@smclv.lv
Lithuania	☎+370 5 2308118	www.smclt.lt	info@smclt.lt
Netherlands	☎+31 (0)205318888	www.smcpneumatics.nl	info@smcpneumatics.nl
Norway	☎+47 67129020	www.smc-norge.no	post@smc-norge.no
Poland	☎+48 (0)222119616	www.smc.pl	office@smc.pl
Portugal	☎+351 226166570	www.smc.eu	postpt@smc.smces.es
Romania	☎+40 213205111	www.smcromania.ro	smcromania@smcromania.ro
Russia	☎+7 8127185445	www.smc-pneumatik.ru	info@smc-pneumatik.ru
Slovakia	☎+421 (0)413213212	www.smc.sk	office@smc.sk
Slovenia	☎+386 (0)73885412	www.smc.si	office@smc.si
Spain	☎+34 902184100	www.smc.eu	post@smc.smces.es
Sweden	☎+46 (0)86031200	www.smc.nu	post@smc.nu
Switzerland	☎+41 (0)523963131	www.smc.ch	info@smc.ch
Turkey	☎+90 212 489 0 440	www.smcpnomatik.com.tr	info@smcpnomatik.com.tr
UK	☎+44 (0)845 121 5122	www.smcpneumatics.co.uk	sales@smcpneumatics.co.uk

SMC CORPORATION Akihabara UDX 15F, 4-14-1, Sotokanda, Chiyoda-ku, Tokyo 101-0021, JAPAN Phone: 03-5207-8249 FAX: 03-5298-5362

1st printing QP printing QP 00 Printed in Spain

Specifications are subject to change without prior notice and any obligation on the part of the manufacturer.