Compact Cylinder

New

Remodeled with a new body to get more flexibility!

Can mount small auto switches on 4 surfaces.

Auto switches can be mounted on any of the 4 surfaces, depending on the installation conditions. (ø12 to ø25: 2 surfaces) Improved flexibility of system design.

Auto switch mounting rail removed
A round slot for mounting small auto switches is provided on 4 surfaces.

NEW
Available up to ø200

NEW ø32 to ø200

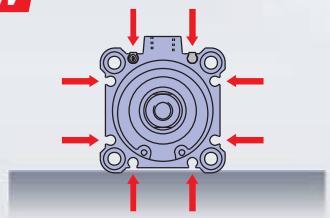

ø12 to ø25: Mountable on 2 surfaces

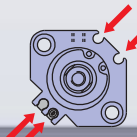

2 switches can be mounted on the same surface.

(ø12: One slot for each surface)

Existing model ø32 to ø50: Only one surface

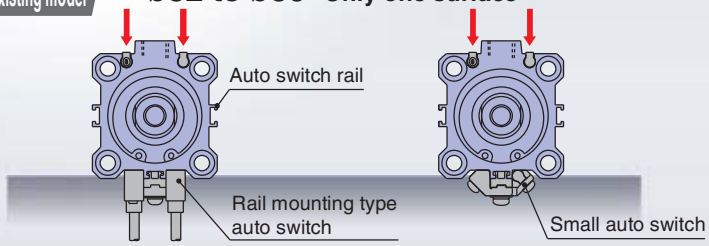

No protrusion of auto switch

- Prevention of damage to auto switch
- Sleeves cannot get caught in the auto switch and its mounting rail.
  → **Improved ease of work and safety**
- Reduction in labour for design
  There is no need to check for interference with a machine, because the outer dimensions of the cylinder do not change when the auto switch is mounted.

Existing model

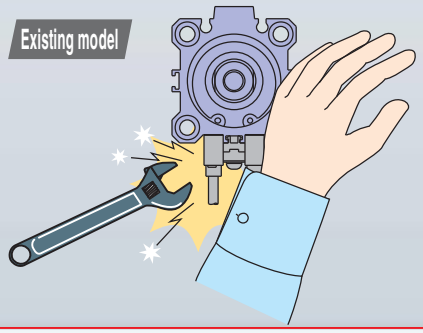

NEW

Exclusive bodies (-XB10) for ø32 to ø100 intermediate strokes (50 mm or more) now kept in inventory*, enabling shorter delivery times. * Formerly produced upon receipt of order

Bore size (mm)	Stroke										
	50	55	60	65	70	75	80	85	90	95	100
ø32 to ø100	◆	●	●	●	●	◆	●	●	●	●	◆

◆ Standard stroke ● Currently stocked intermediate stroke

Series CQ2

SMC

CAT.EUS20-205B-UK

NEW Series CQ2 Compact Cylinder

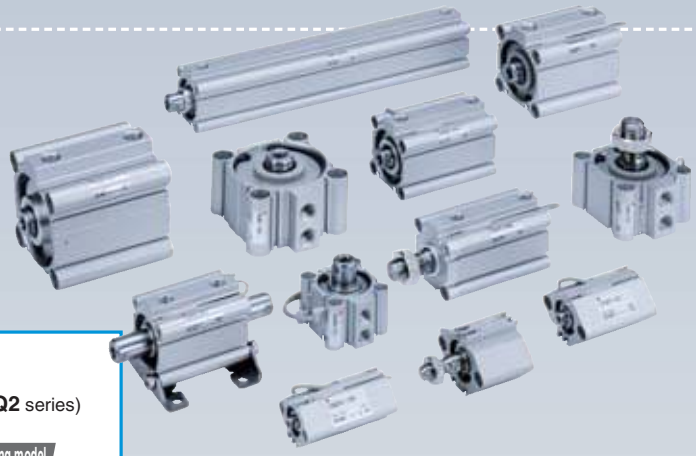

Lighter weight

Reduced by 5 to 13%
(Compared with SMC **CQ2** series)

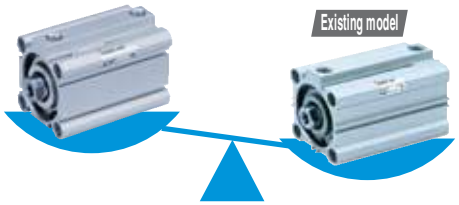

The body strength (kinetic energy, allowable load, withstand pressure, etc.) is the same as the existing product.

Contribution to environment and ecology
Reduction of CO_2 discharge by 1300 t by less use of aluminum

Weight
(Stroke **50** mm, built-in magnet, female thread and with rubber bumper) (g)

Bore size – Stroke	ø40-50 st
NEW CQ2	456(483)
Existing model CQ2	483(527)

( ): With male thread

Small auto switch

2-colour indication solid state auto switch

◎ **Appropriate setting of the mounting position can be performed without mistakes.**

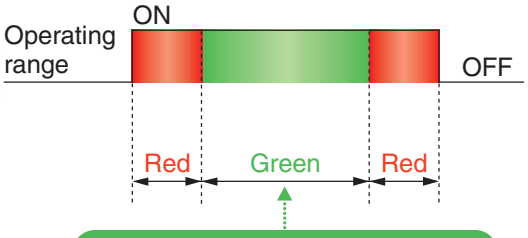

A green light illuminates up at the optimum operating range.

Even if 2-colour indication solid state auto switches are fixed at the optimum operating range (the green light illuminates up), the operation may become unstable depending on the installation environment or magnetic field disturbance. (Magnetic body, external magnetic field, proximal installation of cylinders with built-in magnet and actuators, temperature change, other factors for magnetic force fluctuation during operation, etc.)

For general environments

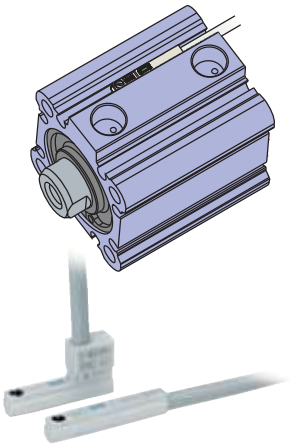

D-M9□W(V)

Water resistant type

For environments exposed to water and coolant

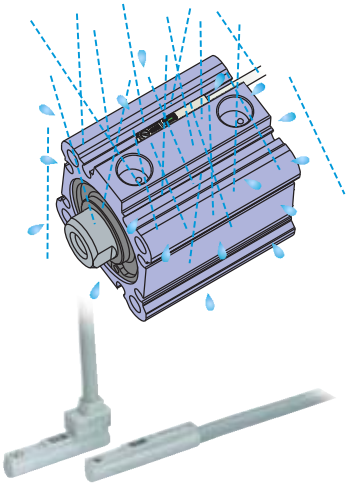

D-M9□A(V)

Magnetic field resistant type

For use with AC spot welders, which generate strong magnetic field

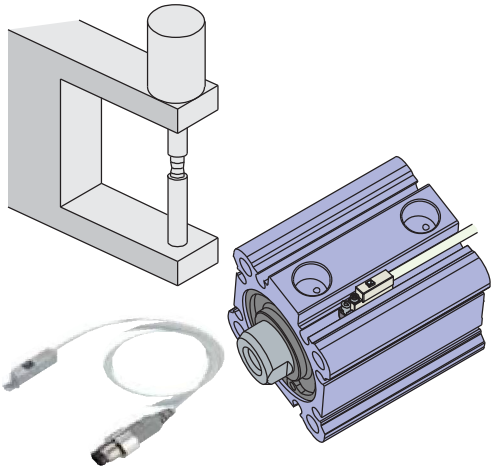

D-P3DW

Reduction in labour for work

■ Reduction in number of components
■ No loss of components

NEW

❶ Insert the auto switch.

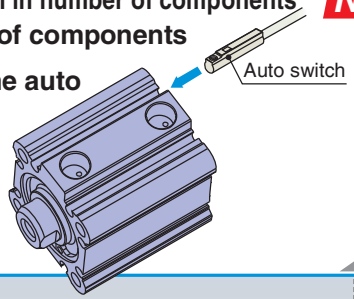

❷ Fix the auto switch.

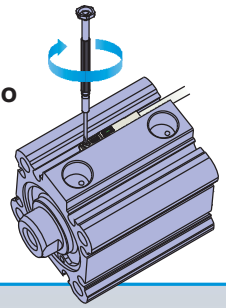

Existing model

■ Takes more labour and time because there are many components.
■ It is likely to lose components

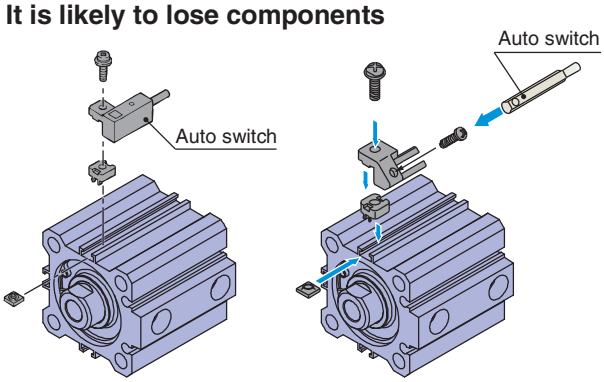

The nuts and screws may fall out when installed vertically.

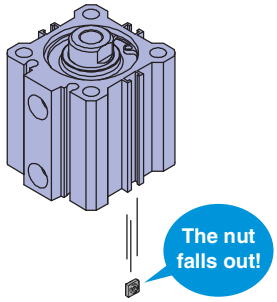

Reduction in labour for design

■ The auto switch can be replaced with the foot brackets mounted.

NEW

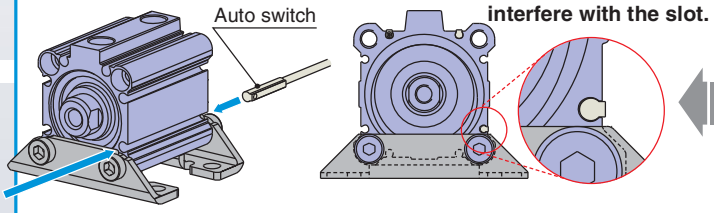

Existing model

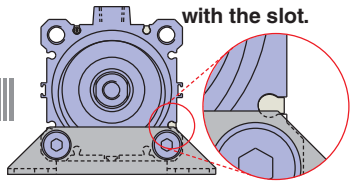

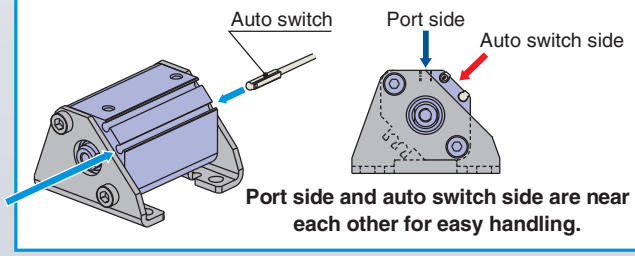

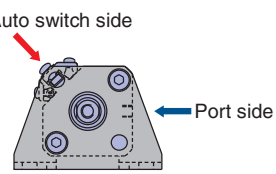

Port side and auto switch side are near each other for easy handling.

● **The rail mounting type auto switch can be mounted.**

Refer to page 174 for further information on auto switch mounting bracket.

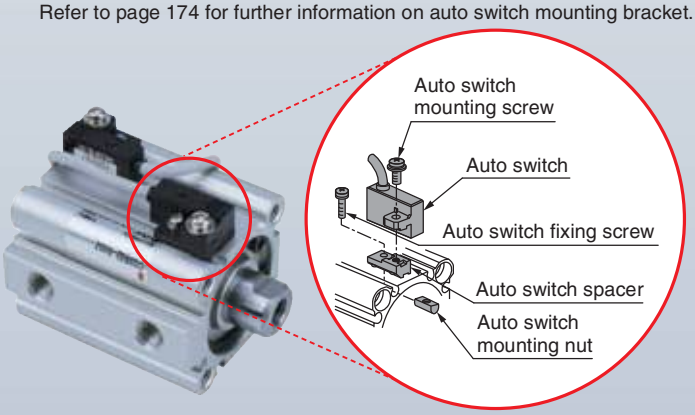

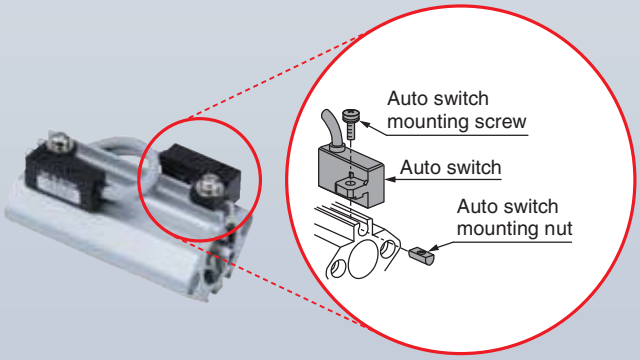

Reduction in labor for order

Part numbers with rod end bracket and/or mounting bolt

This reduces the steps to order the cylinder, rod end bracket, and mounting bolt separately.

Applicable cylinders: C(D)Q2, C(D)Q2□□□-□S/-□T (Single acting)

Example) **CDQ2B32-30DMZ-L W -M9BW**

Mounting bolt	
Nil	No mounting bolt
L	Mounting bolt is shipped together. 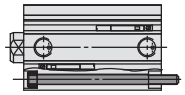

Rod end bracket	
Nil	No bracket and bolt
D	Simple joint A type + Joint 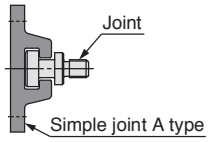
E	Simple joint B type + Joint 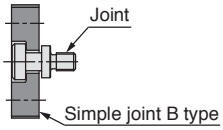
V	Single knuckle joint 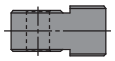
W	Double knuckle joint 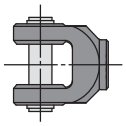

Ordering Example of Cylinder Assembly

Cylinder model: CDQ2B32-30DMZ-LW-M9BW

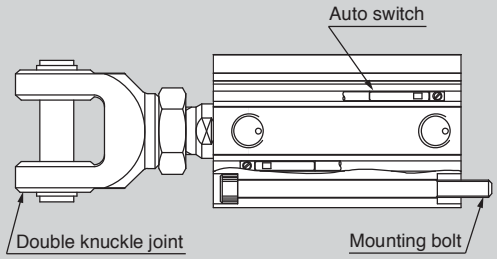

Mounting bracket	**B : Through-hole (Standard)**
Mounting bolt	**L : Yes**
Rod end bracket	**W : Double knuckle joint**
Auto switch D-M9BW	**: 2 pcs.**

∗ Mounting bolt, single knuckle joint and auto switch are shipped together with the product.

Reduction of installation space

Added compact type foot brackets.

■Compact foot bracket has the same width as the cylinder

Overall width reduced by up to **43%** (for ø12)

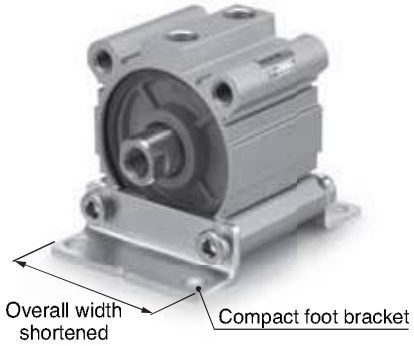

■More compact installation space possible

- Short pitch mounting is possible.
- Allows installation close against a wall.

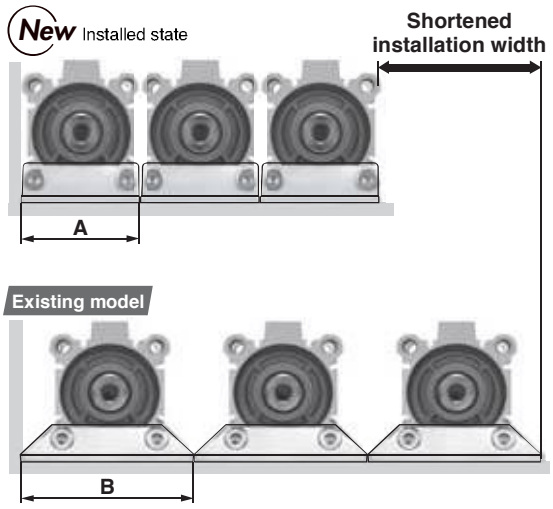

Bore size [mm]	New Compact foot type width A [mm]	Existing foot type width B [mm]	Reduced width for short pitch mounting [mm]		
			1 unit	2 units	3 units
12	25	44	19	38	57
16	29	48	19	38	57
20	36	62	26	52	78
25	40	66	26	52	78
32	45	71	26	52	78
40	52	78	26	52	78
50	64	95	31	62	93
63	77	113	36	72	108
80	98	140	42	84	126
100	117	162	45	90	135

∗ Short pitch mounting is possible only without auto switch.
Consult with SMC for mounting with auto switch.

■Small auto switch can be mounted with compact foot brackets attached.

■Height from the bottom of brackets to the centre of a cylinder is the same as the existing model.

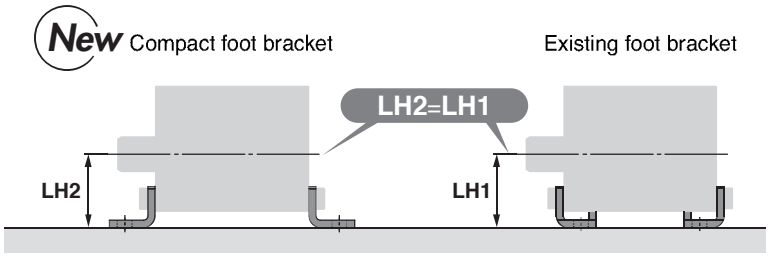

Applicable cylinders: **C(D)Q2, C(D)Q2W, C(D)Q2 (Single acting) (Spring return/Spring extend), C(D)Q2K, C(D)Q2KW (Non-rotating), C(D)Q2 (Long stroke), C(D)Q2□S (Anti-lateral load), C(D)BQ2 (End lock), C(D)Q2□R/□V (Water resistant)**

Reduction in labour for design

Added pivot brackets for double clevis.

■Rotating angle: Max. 100°
(For ø12, ø16)

- Time to design rotating bracket saved.
- Improved amount of mounting freedom
- Can be mounted to an installed double clevis cylinder.

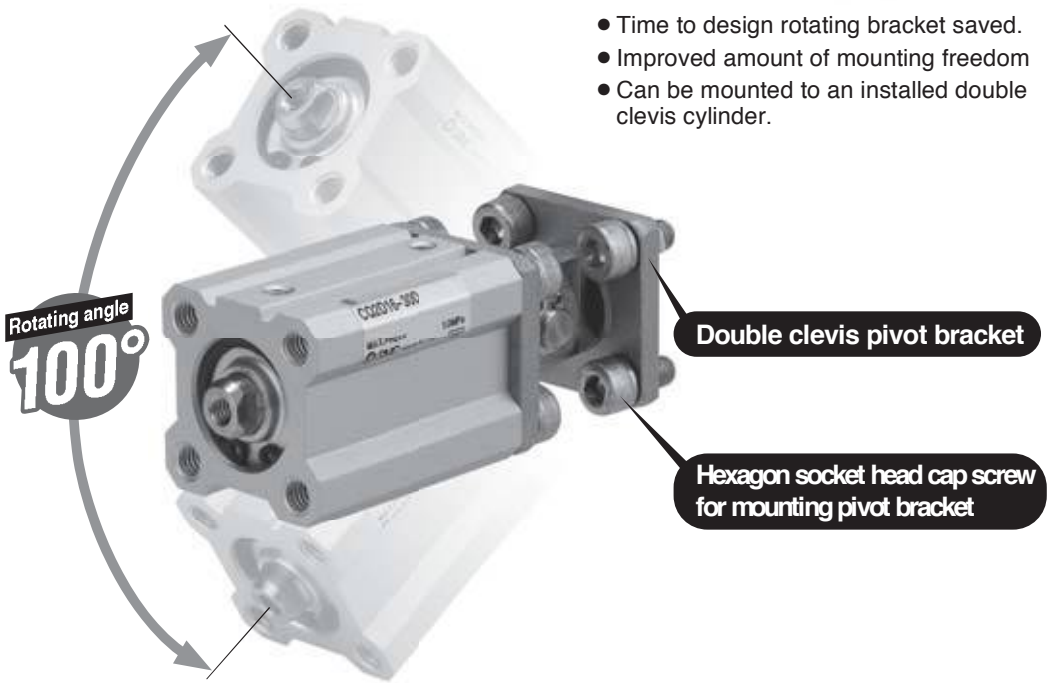

Applicable cylinders: CQ2 (Bore size ø12 to ø100, Mounting bracket, Applicable only to double clevis.)

Compact Cylinder *Series CQ2*

ø12, ø16, ø20, ø25, ø32, ø40, ø50, ø63, ø80, ø100, ø125, ø140, ø160, ø180, ø200

With a short overall length, the space-saving cylinder helps to make various jigs and equipment more compact.

Series Variations

Series	Action	Type	Bore size (mm)	Standard stroke (mm)	Page
Standard NEW	Double acting	Single rod CQ2	12 16 20 25 32 40 50 63 80 100 125 140 160 180 200	ø12, ø16: 5 to 30 ø20, ø25: 5 to 50 ø32, ø40: 5 to 100 ø50 to ø100: 10 to 100	1
		Double rod CQ2W		ø12, ø16: 5 to 30 ø20, ø25: 5 to 50 ø32, ø40: 5 to 100 ø50 to ø100: 10 to 100	26
	Single acting	Spring return/ Spring extend CQ2		ø12 to ø40: 5, 10 ø50: 10, 20	46
Large Bore Size NEW	Double acting	Single rod CQ2		10 to 300	71
		Double rod CQ2W		10 to 300	77
Long Stroke NEW	Double acting	Single rod CQ2		125 to 300	83
Non-rotating Rod NEW	Double acting	Single rod CQ2K		ø12, ø16: 5 to 30 ø20, ø25: 5 to 50 ø32, ø40: 5 to 100 ø50, ø63: 10 to 100	94
		Double rod CQ2KW		ø12, ø16: 5 to 30 ø20, ø25: 5 to 50 ø32, ø40: 5 to 100 ø50, ø63: 10 to 100	108
Axial Piping (Centralised piping type)	Double acting	Single rod CQP2		ø12, ø16: 5 to 30 ø20, ø25: 5 to 50 ø32, ø40: 5 to 100 ø50 to ø100: 10 to 100	121
	Single acting	Spring return/ Spring extend CQP2		ø12 to ø40: 5, 10 ø50: 10, 20	130
Anti-lateral Load NEW	Double acting	Single rod CQ2□S		ø32 to ø40: 5 to 100 ø50 to ø100: 10 to 100	146
With End Lock	Double acting	Single rod CBQ2		ø20 to ø63: 10 to 100 ø80, ø100: 25 to 100	160
Water Resistant NEW	Double acting	Single rod CQ2□R/V		ø20, ø25: 5 to 50 ø32, ø40: 5 to 100 ø50 to ø100: 10 to 100	178

Smooth Cylinder (Low friction) CQ2Y — Refer to Best Pneumatics No. 3.

Low-speed Cylinder CQ2X — Refer to Best Pneumatics No. 3.

Combinations of Standard Products and Made

Series CQ2

● : Standard
◎ : Made to Order
○ : Special product (For details, please contact SMC.)
— : Not available

Made to Order: For details, refer to pages 201 to 235.

Symbol	Specifications	Applicable bore size	CQ2 (Standard) Double acting Single rod	CQ2 (Standard) Double acting Double rod	CQ2 (Standard) Single acting Single rod/ Spring return	CQ2 (Standard) Single acting Single rod/ Spring extend	CQ2 (Large Bore Size) Double acting Single rod	CQ2 (Large Bore Size) Double acting Double rod
			ø12 to ø100		ø12 to ø50		ø125 to ø200	
Standard	Standard product	ø12 to ø100	●	●	●	●	●	●
D	Built-in magnet		●	●	●	●	●	●
CQ2□A	Both ends tapped		●	●	●	●	●	●
CQ2□-□M	Rod end male thread		●	●	●	●	●	●
CQ2□-□C	With rubber bumper		●	●	○	○	● Note 2)	● Note 2)
CQ2□-□F	With boss on head end		●	—	●	●	○	—
CQ2□F	With one-touch fittings	ø32 to ø63	●	●	●	●	○	○
CQ2$^{LF}_{G}$	Foot/Flange	ø12 to ø100	●	●	●	●	○	○
CQ2D	Double clevis		●	—	●	●	○	—
CQ2□H	Air-hydro type	ø20 to ø100	●	●	—	—	○	○
10-, 11-	Clean series	ø12 to ø200	●	○	○	○	○	○
25-	Copper (Cu)-free Note 14)		●	○	○	○	○	○
20A	Copper (Cu) and zinc (Zn)-free Note 14)		●	○	○	○	○	○
20-	Copper and fluorine-free series Note 13)		●	●	●	●	●	●
CQ2□$^{R}_{V}$	Water resistant	ø20 to ø100	●	● Note 6)	○	○	○	○
XB6	Heat resistant cylinder (–10 to 150°C)	ø12 to ø100	◎	◎	○	○	○	○
XB7	Cold resistant cylinder (–40 to 70°C)	ø12 to ø40	◎	◎	○	○	○	○
XB9	Low-speed cylinder (10 to 50 mm/s)	ø12 to ø100	◎	◎	○	○	○	○
XB10	Intermediate stroke (Exclusive body type)	ø12 to ø200	◎	◎	◎	○	◎	◎
XB10A	Intermediate stroke (Spacer-installed type)	ø32 to ø100	◎	○	○	○	○	○
XB11	Long stroke (Air-hydro type only)	ø20 to ø100	◎	—	—	—	—	—
XB13	Low-speed cylinder (5 to 50 mm/s)	ø12 to ø100	◎	◎	○	○	○	○
XB14 Note 12)	Cylinder with heat resistant auto switch	ø16 to ø63	◎	○	○	○	○	○
XC2(A)	Rod end length, 10 mm increased (For foot and flange bracket)	ø12 to ø100	◎	◎	◎	◎	—	—
XC4	With heavy-duty scraper	ø20 to ø100	◎	◎ Note 6)	○	○	○	○
XC6	Piston rod/Retaining ring/Rod end nut material: Stainless steel	ø12 to ø100	◎	◎	◎	◎	○	○
XC8	Adjustable stroke cylinder/Adjustable extension type		◎	—	○	○	○	—
XC9	Adjustable stroke cylinder/Adjustable retraction type		◎	—	○	○	○	—
XC10	Dual stroke cylinder/Double rod		◎	—	○	○	○	—
XC11	Dual stroke cylinder/Single rod		◎	—	○	○	○	—
XC26	With split pins for double clevis pin/ double knuckle joint pin and flat washers		◎	—	◎	◎	○	○
XC27	Double clevis pin/Double knuckle joint pin material: Stainless steel 304		◎	○	◎	◎	○	○
XC35	With coil scraper	ø32 to ø100	◎	◎	○	○	○	○
XC36	With boss on rod side	ø12 to ø100	◎	◎	◎	◎	○	○
XC85	Grease for food processing machines		◎	◎	◎	◎	◎	◎
XC92	Dust resistant actuator	ø32 to ø100	◎	○	○	○	○	○
X144	Special port location	ø12 to ø25	◎	◎	◎	◎	—	—
X202	Full length dimension is the same as Series CQ1.	ø12 to ø100	◎	—	◎	◎	—	—
X203	L dimension from rod cover is the same as Series CQ1.	ø12 to ø32	◎	—	◎	◎	—	—
X235	Special rod end for double rod cylinder	ø12 to ø200	—	◎	—	—	—	◎
X271	Fluororubber seals	ø12 to ø160	◎	◎	◎	◎	◎ Note 11)	◎ Note 11)
X293	Full length dimension is the same as Series CQ1W.	ø12 to ø100	—	◎	—	—	—	—
X525	Long stroke of adjustable extension stroke cylinder (-XC8)		◎	—	○	○	○	—
X526	Long stroke of adjustable retraction stroke cylinder (-XC9)		◎	—	○	○	○	—
X633	Intermediate stroke of double rod cylinder	ø12 to ø200	—	◎	—	—	—	◎
X636	Long stroke of dual stroke single rod cylinder	ø12 to ø100	◎	—	○	—	○	—
X1876	Cylinder tube: With concave boss on head side	ø20 to ø100	◎	—	◎	◎	—	—

Note 1) ø12 with auto switch: With rubber bumper (Standard)
Note 2) With rubber bumper (Standard)
Note 3) ø12 to ø16: (○), for ø20 to ø100 only (up to ø50 for single acting type)
Note 4) ø12 to ø32: (○), for ø40 to ø63 only
Note 5) ø12: (–)
Note 6) ø20 to ø32: (○), for ø40 to ø100 only

CQ2 (Long Stroke)	CQ2K (Non-rotating Rod)		CQP2 (Axial Piping) Note 12)			CQ2□S (Anti-lateral Load)	CBQ2 Note 12) (With End Lock)
Double acting	Double acting		Double acting	Single acting		Double acting	Double acting
Single rod	Single rod	Double rod	Single rod	Single rod/ Spring return	Single rod/ Spring extend	Single rod	Single rod
ø32 to ø100	ø12 to ø63		ø12 to ø100	ø12 to ø50		ø32 to ø100	ø20 to ø100
●	●	●	●	●	●	●	●
●	●	●	●	●	●	●	●
●	● Note 4)	● Note 4)	○	○	○	●	●
●	●	●	●	●	●	●	●
● Note 2)	○ Note 1)	○ Note 1)	●	○	○	● Note 2)	● Note 2)
○	●	—	● Note 3)	● Note 3)	● Note 3)	●	○
●	●	●	○	○	○	●	○
●	● Note 4)	● Note 4)	○	○	○	●	●
●	● Note 4)	—	○	○	○	●	●
○	—	—	●	—	—	○	—
●	○	○	○	○	○	○	○
●	○	○	○	○	○	●	○
●	○	○	○	○	○	●	○
●	● Note 5)	● Note 5)	●	●	●	●	○
○	—	—	● Note 7)	○	○	○	○
○	○	○	◎	○	○	○	○
○	○	○	◎	○	○	○	—
○	○	○	◎	○	○	○	○
◎	◎ Note 4)	◎ Note 4)	○	○	○	◎	◎
○	○	○	○	○	○	○	○
—	—	—	—	—	—	—	—
○	○	○	◎	○	○	○	—
○	○	○	○	○	○	○	○
—	◎	◎	○	○	○	○	○
◎	—	—	◎ Note 7)	○	○	○	○
◎	○	○	◎	◎	◎	◎	○
○	◎	—	○	○	○	○	○ Note 8)
○	◎	—	○	○	○	○	○ Note 9)
○	◎	—	—	—	—	○	○
○	◎	—	○	○	○	○	○
◎	◎ Note 4)	—	○	○	○	◎	◎
◎	◎	○	○	○	○	◎	○
○	—	—	◎	○	○	○	○
◎ Note 10)	◎ Note 10)	◎ Note 10)	◎	◎	◎	○	○
○	○	○	◎	◎	◎	○	◎
○	—	—	○	○	○	○	○
—	○	○	—	—	—	—	—
—	—	—	—	—	—	—	—
—	—	—	—	—	—	—	—
—	—	○	—	—	—	—	—
◎	○	○	◎	◎	◎	◎	○
—	—	—	—	—	—	—	—
○	○	—	○	○	○	○	○ Note 8)
○	○	—	○	○	○	○	○ Note 9)
—	—	◎	—	—	—	—	—
○	○	—	○	○	—	○	○
—	◎	—	—	—	—	◎	○

Note 7) ø20 to ø25: (○), for ø32 to ø100 only
Note 8) Rod end lock: (–), for head end lock only
Note 9) Head end lock: (–), for rod end lock only
Note 10) With boss on rod end (Standard)
Note 11) ø180 to ø200: (○), for ø125 to ø160 only
Note 12) The body shape is the same as the existing product.
Note 13) Cooper-free for the externally exposed part.
Note 14) For details, refer to www.smc.eu

Compact Cylinder: Standard Double Acting, Single Rod

Series CQ2

ø12, ø16, ø20, ø25, ø32, ø40, ø50, ø63, ø80, ø100

How to Order

Without auto switch 12 to ø25

CQ2 B □ 20 □ – 30 D □ — □ □ – □

Without auto switch ø32 to ø100

CQ2 B □ 32 □ – 30 D □ Z – □ □ – □

With auto switch

CDQ2 B □ 32 □ – 30 D □ Z – L W – M9BW □ – □

With auto switch
(Built-in magnet)

Mounting

B	Through-hole (Standard)	F	Rod flange
A	Both ends tapped	G	Head flange
L	Foot	D	Double clevis
LC	Compact foot		

∗ Mounting brackets are shipped together, (but not assembled).

Type

–	Pneumatic
H	Air-hydro Note 1)

Note 1) Bore sizes available for air-hydro type are ø20 to ø100.

Bore size

12	12 mm
16	16 mm
20	20 mm
25	25 mm
32	32 mm
40	40 mm
50	50 mm
63	63 mm
80	80 mm
100	100 mm

Port thread type

–	M thread	ø12 to ø25
	Rc	ø32 to ø100
TN	NPT	
TF	G	
F	Built-in one-touch fittings Note 2)	

Note 2) Bore sizes available with one-touch fittings are ø32 to ø63. Besides, it is not possible to use for air-hydro type.
Note 3) "TF" is not available for air-hydro type.
∗ For cylinders without auto switch, M threads are compatible only for ø32-5 mm stroke.

Cylinder stroke (mm)
Refer to the next page and page 3 for standard strokes and intermediate strokes.

Action

D	Double acting

Body option

–	Standard (Rod end female thread)
F	With boss on head end
C	With rubber bumper Note 4)
M	Rod end male thread

∗ Combination of body options ("CM", "FC", "FM", "FCM") is available.
Note 4) Air-hydro type with rubber bumper is not available.

Auto switch mounting groove

Z	ø12 to ø25	2 surfaces
	ø32 to ø100	4 surfaces

Note 5) The made-to-order, heat resistant auto switch -XB14 is not applicable.

Mounting bolt

–	None
L	Shipped together

∗ Mounting bolt is shipped together only when the mounting bracket is "B".
∗ For details about the mounting bolt sizes, refer to pages 5 and 10.
∗ Mounting bolt is shipped together.

Rod end bracket
(Refer to pages 19 and 20.)

–	None
D	Simple joint A type + Joint
E	Simple joint B type + Joint
V	Single knuckle joint
W	Double knuckle joint

∗ The single knuckle joint and double knuckle joint cannot be mounted for the rod end female thread.
∗ A knuckle joint pin is not provided with the single knuckle joint.
∗ The simple joint A and B types cannot be mounted for the rod end male thread.
∗ Rod end bracket is shipped together.

Auto switch

–	Without auto switch

∗ Refer to the below table for applicable auto switches.

Number of auto switches

–	2 pcs.
S	1 pc.
n	"n" pcs.

Made to Order
Refer to the next page for details.

Built-in Magnet Cylinder Model

If a built-in magnet cylinder without an auto switch is required, there is no need to enter the symbol for the auto switch.
(Example) CDQ2L32-25DZ

Applicable Auto Switches

Refer to pages 1263 to 1371 in Best Pneumatics No. 2 for further information on auto switches.
/ Refer to the individual catalogue (ES20-201) for the D-P3DW type.

Type	Special function	Electrical entry	Indicator light	Wiring (Output)	Load voltage DC		Load voltage AC	Auto switch model Perpendicular	Auto switch model In-line	Lead wire length (m) 0.5 (–)	1 (M)	3 (L)	5 (Z)	None (N)	Pre-wired connector	Applicable load	
Solid state auto switch	—	Grommet	Yes	3-wire (NPN)	24 V	5 V, 12 V	–	M9NV	M9N	●	●	●	○	–	○	IC circuit	Relay, PLC
				3-wire (PNP)				M9PV	M9P	●	●	●	○	–	○		
				2-wire		12 V		M9BV	M9B	●	●	●	○	–	○	–	
	Diagnostic indication (2-colour indication)			3-wire (NPN)		5 V, 12 V		M9NWV	M9NW	●	●	●	○	–	○	IC circuit	
				3-wire (PNP)				M9PWV	M9PW	●	●	●	○	–	○		
				2-wire		12 V		M9BWV	M9BW	●	●	●	○	–	○	–	
	Water resistant (2-colour indication)			3-wire (NPN)		5 V, 12 V		M9NAV**	M9NA**	○	○	●	○	–	○	IC circuit	
				3-wire (PNP)				M9PAV**	M9PA**	○	○	●	○	–	○		
				2-wire		12 V		M9BAV**	M9BA**	○	○	●	○	–	○	–	
	Magnetic field resistant (2-colour indication)			2-wire (Non-polar)		–		–	P3DW	●	–	●	●	–	○		
Reed auto switch	—	Grommet	Yes	3-wire (NPN equivalent)	–	5 V	–	A96V	A96	●	–	●	–	–	–	IC circuit	–
				2-wire	24 V	12 V	100 V	A93V	A93	●	–	●	–	–	–	–	Relay, PLC
			No			5 V, 12 V	100 V or less	A90V	A90	●	–	●	–	–	–	IC circuit	

∗∗ Water resistant type auto switches can be mounted on the above models, but in such case SMC cannot guarantee water resistance. If water resistance is needed, we recommend water resistant cylinders be used. (Page 178)

∗ Lead wire length symbols: 0.5 m ····· – (Example) M9NW
1 m ····· M (Example) M9NWM
3 m ····· L (Example) M9NWL
5 m ····· Z (Example) M9NWZ

∗ Solid state auto switches marked with "○" are produced upon receipt of order.
∗ The D-P3DW□ type is available from ø32 to ø100 only.

∗ There are other applicable auto switches other than the listed above. For details, refer to page 199.
∗ For details about auto switches with pre-wired connector, refer to pages 1328 and 1329 in Best Pneumatics No. 2.

Symbol
Double acting, Single rod

Symbol
With boss on head end

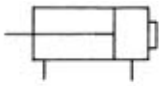

Made to Order

(For details, refer to pages 201 to 235.)

Symbol	Specifications
-XA□	Special rod end shape
-XB6	Heat resistant cylinder (–10 to 150°C) w/o auto switch only
-XB7	Cold resistant cylinder (–40 to 70°C) w/o auto switch only
-XB9	Low-speed cylinder (10 to 50 mm/s)
-XB10	Intermediate stroke (Exclusive body type)
-XB10A	Intermediate stroke (Spacer-installed type)
-XB11	Long stroke (Air-hydro type only)
-XB13	Low-speed cylinder (5 to 50 mm/s)
-XB14	Cylinder with heat resistant auto switch ø16 to ø63 only
-XC2(A)	Rod end length, 10mm increased (For foot and flange bracket)
-XC4	With heavy-duty scraper, ø20 to ø100 only
-XC6	Piston rod/Retaining ring/Rod end nut material: Stainless steel
-XC8	Adjustable stroke cylinder/Adjustable extension type
-XC9	Adjustable stroke cylinder/Adjustable retraction type
-XC10	Dual stroke cylinder/Double rod
-XC11	Dual stroke cylinder/Single rod
-XC26	With split pins for double clevis pin/ double knuckle joint pin and flat washers
-XC27	Double clevis pin/Double knuckle joint pin material: Stainless steel 304
-XC35	With coil scraper, ø32 to ø100 only
-XC36	With boss on rod side
-XC85	Grease for food processing equipment
-XC92	Dust resistant actuator
-X144	Special port location, with auto switch ø12 to ø25 only
-X202	Full length dimension is the same as Series CQ1, Except ø16, ø25.
-X203	L dimension from rod cover is the same as Series CQ1, ø20, ø32 only.
-X271	Fluororubber seals
-X525	Long stroke of adjustable extension stroke cylinder (-XC8)
-X526	Long stroke of adjustable retraction stroke cylinder (-XC9)
-X636	Long stroke of dual stroke single rod cylinder
-X1876	Cylinder tube: With concave boss on head side

Note) -XB14: The body shape is the same as the existing product.

Refer to pages 193 to 199 for the specifications of cylinders with autoswitches.

- Auto switch proper mounting position (detection at stroke end) and its mounting height
- Minimum stroke for auto switch mounting
- Operating range
- Auto switch mounting brackets/Part no.

Specifications

Pneumatic type

Bore size (mm)		12	16	20	25	32	40	50	63	80	100
Action		Double acting, Single rod									
Fluid		Air									
Proof pressure		1.5 MPa									
Maximum operating pressure		1.0 MPa									
Minimum operating pressure		0.07 MPa		0.05 MPa							
Ambient and fluid temperature		Without auto switch: –10 to 70°C (No freezing) With auto switch: –10 to 60°C (No freezing)									
Lubrication		Not required (Non-lube)									
Piston speed		50 to 500 mm/s									
Allowable kinetic energy (J)	**Standard**	0.022	0.038	0.055	0.09	0.15	0.26	0.46	0.77	1.36	2.27
	With rubber bumper	0.043	0.075	0.11	0.18	0.29	0.52	0.91	1.54	2.71	4.54
Stroke length tolerance		$^{+1.0\ mm}_{0}$ Note)									

Note) Stroke length tolerance does not include the amount of bumper change.

Air-hydro type

Bore size (mm)	20	25	32	40	50	63	80	100
Action	Double acting, Single rod							
Fluid	Turbine oil Note)							
Proof pressure	1.5 MPa							
Maximum operating pressure	1.0 MPa							
Minimum operating pressure	0.18 MPa			0.1 MPa				
Ambient and fluid temperature	5 to 60C							
Piston speed	5 to 50 mm/s							
Cushion	None							
Stroke length tolerance	$^{+1.0\ mm}_{0}$							

Note) Refer to "Handling Precautions for SMC Products" (M-E03-3) for Actuator Precautions (5).

Standard Strokes

Pneumatic type

(mm)

Bore size	Standard stroke
12, 16	5, 10, 15, 20, 25, 30
20, 25	5, 10, 15, 20, 25, 30, 35, 40, 45, 50
32, 40	5, 10, 15, 20, 25, 30, 35, 40, 45, 50, 75, 100
50 to 100	10, 15, 20, 25, 30, 35, 40, 45, 50, 75, 100

- For long strokes exceeding the standard stroke range, refer to page 83.
- For intermediate strokes, refer to page 3.

Air-hydro type

(mm)

Bore size	Standard stroke
20, 25	5, 10, 15, 20, 25, 30, 35, 40, 45, 50
32, 40	5, 10, 15, 20, 25, 30, 35, 40, 45, 50, 75, 100
50, 63, 80, 100	10, 15, 20, 25, 30, 35, 40, 45, 50, 75, 100

Mounting Brackets/Part No.

Bore size (mm)		Model	Foot Note 1)	Compact Foot Note 1)	Flange	Doubleclevis
12	Without switch	CQ2□□-□D	CQ-L012	CQ-LC012	CQ-F012	CQ-D012
	With switch	CQ2□□-□DZ	CQ-LZ12	CQ-LCZ12		
16	Without switch	CQ2□□-□D	CQ-L016	CQ-LC016	CQ-F016	CQ-D016
	With switch	CQ2□□-□DZ	CQ-LZ16	CQ-LCZ16		
20	Without switch	CQ2□□-□D	CQ-L020	CQ-LC020	CQ-F020	CQ-D020
	With switch	CQ2□□-□DZ	CQ-LZ20	CQ-LCZ20		
25	Without switch	CQ2□□-□D	CQ-L025	CQ-LC025	CQ-F025	CQ-D025
	With switch	CQ2□□-□DZ	CQ-LZ25	CQ-LCZ25		
32		CQ2□□-□DZ	CQ-L032	CQ-LC032	CQ-F032	CQ-D032
40		CQ2□□-□DZ	CQ-L040	CQ-LC040	CQ-F040	CQ-D040
50		CQ2□□-□DZ	CQ-L050	CQ-LC050	CQ-F050	CQ-D050
63		CQ2□□-□DZ	CQ-L063	CQ-LC063	CQ-F063	CQ-D063
80		CQ2□□-□DZ	CQ-L080	CQ-LC080	CQ-F080	CQ-D080
100		CQ2□□-□DZ	CQ-L100	CQ-LC100	CQ-F100	CQ-D100

Note 1) When ordering a foot and compact food brackets, the required quantity will be different depending on the bore size.
ø12 to ø25:
- Without switch: Order 2 pieces per cylinder.
- With switch: Order 1 piece per cylinder. (Part number for a set of 2 foot brackets)

ø32 to ø100:
- Order 2 pieces per cylinder.

Note 2) Parts belonging to each bracket are as follows.
Foot, Compact foot, Flange: Body mounting bolts
Double clevis: Clevis pin, Type C retaining rings for axis, Body mounting bolts

Manufacture of Intermediate Strokes (Except air-hydro type)

1. Spacer-installed type 1: Standard model number

Intermediate stroke with ◎: Available in 1 mm intervals
A spacer is installed on tubes with a stroke longer than the specified stroke (◆).

◆: Standard stroke

Bore size (mm)	Stroke range	Type	Stroke																							
			←→	5	←→	10	←→	15	←→	20	←→	25	←→	30	←→	35	←→	40	←→	45	←→	50	←→	75	←→	100
12, 16	1 to 29	Spacer-installed type 1	◎	◆	◎	◆	◎	◆	◎	◆	◎	◆	◎	◆												
20, 25	1 to 49		◎	◆	◎	◆	◎	◆	◎	◆	◎	◆	◎	◆	◎	◆	◎	◆	◎	◆	◎	◆				
32, 40	1 to 99		◎	◆	◎	◆	◎	◆	◎	◆	◎	◆	◎	◆	◎	◆	◎	◆	◎	◆	◎	◆	◎	◆	◎	◆
50 to 100	1 to 99		◎	◎	◎	◆	◎	◆	◎	◆	◎	◆	◎	◆	◎	◆	◎	◆	◎	◆	◎	◆	◎	◆	◎	◆

Ordering example (when ordering ø32-57 mm stroke (with through-hole (standard), without switch)

Type	1. Spacer-installed type 1
Part no.	Standard model number
Order no.	**CQ2B32-57DZ** (uses 75 mm stroke tube) • CQ2B32-75DZ with 18 mm width spacer inside • The B dimension is 108 mm.

2. Spacer-installed type 2: Suffix "-XB10A"

Intermediate stroke with ◎: Available in 1 mm intervals
A spacer is installed on tubes with a stroke longer than the specified stroke (●).

◆: Standard stroke ●: Stroke in stock

Bore size (mm)	Stroke range	Type	Stroke																			
			←→	55	←→	60	←→	65	←→	70	*	75	←→	80	←→	85	←→	90	←→	95	*	100
32, 40	51 to 94	Spacer-installed type 2	◎	●	◎	●	◎	●	◎	●	—	◆	◎	●	◎	●	◎	●	◎	●	—	◆
50 to 100	51 to 94		◎	●	◎	●	◎	●	◎	●	—	◆	◎	●	◎	●	◎	●	◎	●	—	◆

Ordering example (when ordering ø32-57 mm stroke (with through-hole (standard), without switch)

Type	2. Spacer-installed type 2
Part no.	Suffix "-XB10A" to the end of model number.
Order no.	**CQ2B32-57DZ-XB10A** (uses 60 mm stroke tube) • CQ2B32-60DZ-XB10 with 3 mm width spacer inside • The B dimension is 93 mm.

Note) Specify a spacer-installed type 1 with standard model number for ordering an intermediate stroke with a * mark. Refer to page 211 for details.

3. Exclusive body type: Suffix "-XB10"

Available in 1 mm intervals
Exclusive body can be manufactured for specified stroke upon request.

Bore size (mm)	Stroke range	Type
12, 16	6 to 29	Exclusive body
20, 25	6 to 49	
32, 40	6 to 99	
50 to 100	11 to 99	

Note) In the case of exclusive body type with ø32 to ø100 (-XB10) with the stroke length exceeding 50 mm, reference values of the longitudinal dimension (A/B dimension) will be the same as those with auto switch. Refer to page 209 for details.

Ordering example
(when ordering ø32-57 mm stroke (with through-hole (standard), without switch)

Type	3. Exclusive body type
Part no.	Suffix "-XB10" to the end of model number.
Order no.	**CQ2B32-57DZ-XB10** (uses 57 mm stroke tube) • Makes 57 mm stroke tube. • The B dimension is 90 mm.

For 55, 60, 65, 70, 80, 85, 90, and 95 stroke, exclusive bodies are kept in inventory, enabling shorter delivery times.

Retaining Ring Installation/Removal

⚠Caution

1. For installation and removal, use an appropriate pair of pliers (tool for installing a type C retaining ring).
2. Even if a proper plier (tool for installing a type C retaining ring) is used, it is likely to inflict damage to a human body or peripheral equipment, as a retaining ring may be flown out of the tip of a plier (tool for installing a type C retaining ring). Be much careful with the popping of a retaining ring. Besides, be certain that a retaining ring is placed firmly into the groove of rod cover before supplying air at the time of installment.

Mounting

⚠Caution

The CQ2 series compact cylinders are designed to create compact mechanical equipment and promote space saving. Thus, if it is used in the same manner as conventional cylinders such as tie-rod cylinders, it may degrade the performance. Paysufficientattention to the operating conditions when using.

Mounting

⚠Caution

1. Allowable lateral load
Lateral load that can apply to the piston rod end is limited. If a cylinder is used witha lateral load over the limit, it may cause air leakage due to abnormal friction of seals, galling of cylinder tubes and pistons, or abnormal friction of the bearing part. The lateral load applied to the piston rod must be within the allowable range indicatedin this catalogue. When the load exceeds the limit, use a double rod cylinder, install a guide, or change the bore size to suit the load in order to make the load within the allowable range. As a standard product, an anti-lateral load type cylinder that is resistant to approx. 2 times more than the conventional compact CQ2 series is also available (page 146).

2. Connection with a work piece
When a work piece is mounted on the piston rod end, connect them aligning the center of piston rod and a work piece. If they are off-center, lateral load is generated and phenomena mentioned in (1) may occur. In order not to apply the off-center load, use of a floating joint or simple joint is recommended.

3. Simultaneous use of multiple cylinders
It is difficult to control the speed of pneumatic cylinders. The following conditions cause speed change: change in supply pressure, load, temperature and lubrication, performance difference of each cylinder, deterioration of each part over time, etc. Aspeed controller can be used to control the speed of multiple cylinders simultaneously for a short period of time, but depending on conditions, it may not work as desired. If multiple cylinders cannot operate simultaneously, unreasonable force is applied to the piston rod because cylinder positions may not be the same. This may cause abnormal friction of seals and bearings, and galling of cylinder tubes and pistons. Do not use an application to operate several cylinders simultaneously by adjusting cylinder speed. If this is inevitable, use a high rigid guide against load, so that the cylinder is not damaged even when the each cylinder output is slightly different.

Allowable Kinetic Energy

Load Weight and Piston Speed (J)

Bore size (mm)	12	16	20	25	32	40	50	63	80	100
Standard/ Allowable kinetic energy: Ea	0.022	0.038	0.055	0.09	0.15	0.26	0.46	0.77	1.36	2.27
With rubber bumper/ Allowable kinetic energy: Eb	0.043	0.075	0.110	0.18	0.29	0.52	0.91	1.54	2.71	4.54

$$\text{Kinetic energy } E\ (J) = \frac{(m1+m2)\ V^2}{2}$$

m1: Weight of cylinder movable parts kg
m2: Load weight kg
V: Piston speed m/s

Weight of Cylinder Movable Parts/Without Built-in Magnet (g)

Bore size (mm)	Cylinder stroke (mm)											
	5	10	15	20	25	30	35	40	45	50	75	100
12	5	6	7	8	10	11	—	—	—	—	—	—
16	9	11	13	15	17	19	—	—	—	—	—	—
20	15	18	21	24	27	31	34	37	40	44	—	—
25	24	28	33	37	42	46	51	55	60	64	—	—
32	45	52	60	68	76	84	92	100	107	115	170	209
40	64	72	80	88	96	104	112	119	127	135	190	229
50	—	117	129	141	153	166	178	190	202	214	300	361
63	—	153	165	177	190	202	214	226	239	251	337	398
80	—	270	289	308	327	347	366	385	404	423	557	653
100	—	487	515	543	570	598	625	653	681	708	901	1038

Weight of Cylinder Movable Parts/With Built-in Magnet (g)

Bore size (mm)	Cylinder stroke (mm)											
	5	10	15	20	25	30	35	40	45	50	75	100
12	8	9	10	11	12	13	—	—	—	—	—	—
16	16	18	20	22	24	26	—	—	—	—	—	—
20	28	31	34	37	40	44	47	50	53	56	—	—
25	44	48	53	57	62	66	71	75	80	84	—	—
32	78	86	93	101	109	117	125	133	140	148	187	227
40	109	117	125	133	140	148	156	164	172	180	219	258
50	—	187	199	211	223	236	248	260	272	285	346	407
63	—	254	266	278	290	303	315	327	339	352	413	474
80	—	433	453	472	491	510	530	549	568	587	683	778
100	—	741	768	796	823	851	879	906	934	962	1099	1236

Additional Weight of Cylinder Movable Parts (g)

Bore size (mm)		12	16	20	25	32	40	50	63	80	100
Rod end male thread	Male thread	1.5	3	6	12	26	27	53	53	120	175
	Nut	1	2	4	8	17	17	32	32	49	116
With rubber bumper		0	0	–2	–3	–3	–7	–9	–18	–31	–56

Calculation: (Example) **CDQ2B32-20DCMZ**
- Basic weight: CDQ2B32-20DZ ····· 101 g
- Additional weight: Rod end male thread ····· 43 g
  With rubber bumper ····· –3 g
  141 g

Allowable Lateral Load at Rod End

Without Auto Switch

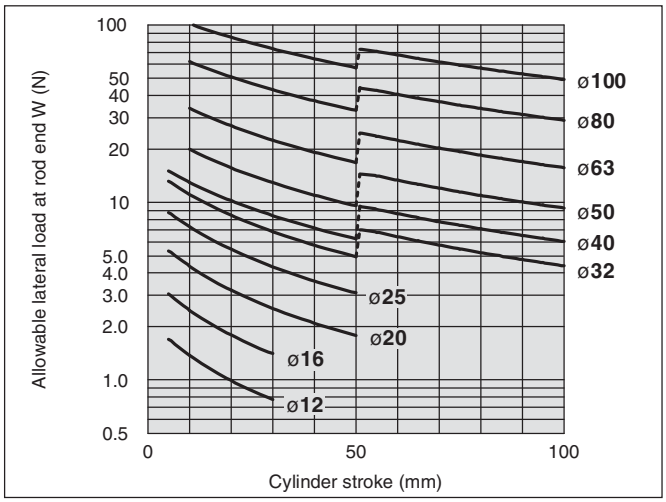

With Auto Switch

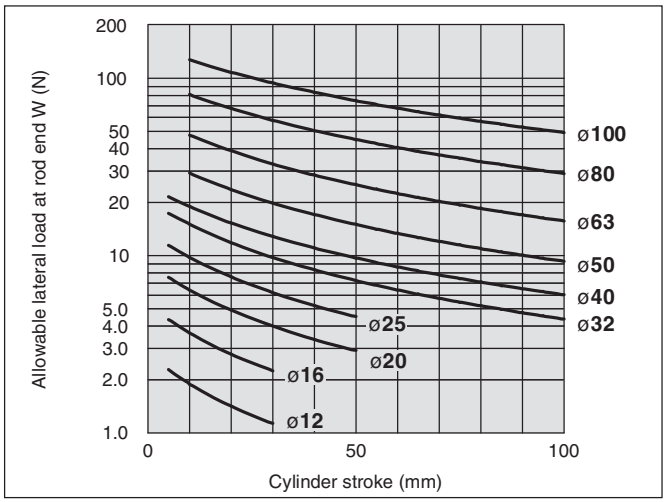

If an allowable lateral load at rod end is exceeding the value in the graph, we recommend anti-lateral load type cylinder be used.

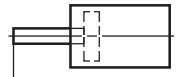

(Mounting orientation: Horizontal)

Theoretical Output

(N)

Bore size (mm)	Operating direction	Operating pressure (MPa)		
		0.3	0.5	0.7
12	IN	25	42	59
	OUT	34	57	79
16	IN	45	75	106
	OUT	60	101	141
20	IN	71	118	165
	OUT	94	157	220
25	IN	113	189	264
	OUT	147	245	344
32	IN	181	302	422
	OUT	241	402	563
40	IN	317	528	739
	OUT	377	628	880
50	IN	495	825	1150
	OUT	589	982	1370
63	IN	841	1400	1960
	OUT	935	1560	2180
80	IN	1360	2270	3170
	OUT	1510	2510	3520
100	IN	2140	3570	5000
	OUT	2360	3930	5500

Weight

Weight

(g)

Bore size (mm)	Cylinder stroke (mm)											
	5	10	15	20	25	30	35	40	45	50	75	100
12	29	35	41	47	54	60	—	—	—	—	—	—
16	42	50	59	67	76	84	—	—	—	—	—	—
20	63	75	88	101	114	127	140	152	165	178	—	—
25	86	100	115	129	144	158	173	187	202	216	—	—
32	125	145	165	184	204	224	244	263	283	303	448	547
40	187	208	230	251	273	294	315	337	358	380	552	664
50	—	339	372	405	438	471	504	537	570	603	872	1043
63	—	480	518	556	594	632	670	708	746	784	1112	1308
80	—	916	976	1036	1097	1157	1217	1277	1338	1398	1917	2215
100	—	1608	1688	1768	1849	1929	2010	2090	2170	2251	2982	3391

Additional Weight

(g)

Bore size (mm)		12	16	20	25	32	40	50	63	80	100
Both ends tapped		2	2	6	6	6	6	6	19	45	45
Rod end male thread	Male thread	1.5	3	6	12	26	27	53	53	120	175
	Nut	1	2	4	8	17	17	32	32	49	116
With boss on head end		0.7	1.3	2	3	5	7	13	25	45	96
With rubber bumper		0	0	–2	–3	–3	–7	–9	–18	–31	–56
Built-in one-touch fittings		—	—	—	—	12	12	21	21	—	—
Foot (Including mounting bolts)		55	67	164	186	142	154	243	317	683	1052
Compact foot (Including mounting bolts)		41	51	121	140	99	114	177	241	501	770
Rod flange (Including mounting bolts)		57	69	139	161	180	214	373	559	1056	1365
Head flange (Including mounting bolts)		54	65	133	152	165	198	348	534	1017	1309
Double clevis (Including pin, retaining rings, bolts)		32	39	88	123	151	196	393	554	1109	1887

Calculation: (Example) **CQ2D32-20DCMZ**

- Basic weight: CQ2B32-20DZ ····· 184 g
- Additional weight: Both ends tapped ····· 6 g
  Rod end male thread ····· 43 g
  With rubber bumper ····· –3 g
  Double clevis ····· 151 g
  381 g

Mounting Bolt for CQ2B/Without Auto Switch

Mounting method: Mounting bolt for through-hole mounting of the CQ2B is available as an option. Refer to the following for ordering procedures. Order the actual number of bolts that will be used.

Example) CQ-M3 x 25L 4 pcs.

Material: Chromium molybdenum steel
Surface treatment: Zinc chromated

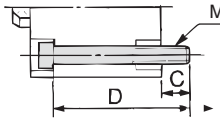

Cylinder model	C	D	Mounting bolt part no.
CQ2B12-5D	6.5	25	CQ-M3 x 25L
-10D		30	x 30L
-15D		35	x 35L
-20D		40	x 40L
-25D		45	x 45L
-30D		50	x 50L
CQ2B16-5D	5	25	CQ-M3 x 25L
-10D		30	x 30L
-15D		35	x 35L
-20D		40	x 40L
-25D		45	x 45L
-30D		50	x 50L
CQ2B20-5D	7.5	25	CQ-M5 x 25L
-10D		30	x 30L
-15D		35	x 35L
-20D		40	x 40L
-25D		45	x 45L
-30D		50	x 50L
-35D		55	x 55L
-40D		60	x 60L
-45D		65	x 65L
-50D		70	x 70L
CQ2B25-5D	9.5	30	CQ-M5 x 30L
-10D		35	x 35L
-15D		40	x 40L
-20D		45	x 45L
-25D		50	x 50L
-30D		55	x 55L
-35D		60	x 60L
-40D		65	x 65L
-45D		70	x 70L
-50D		75	x 75L
CQ2B32-5DZ	9	30	CQ-M5 x 30L
-10DZ		35	x 35L
-15DZ		40	x 40L
-20DZ		45	x 45L
-25DZ		50	x 50L
-30DZ		55	x 55L
-35DZ		60	x 60L
-40DZ		65	x 65L
-45DZ		70	x 70L
-50DZ		75	x 75L
-55DZ-XB10		90	x 90L
-60DZ-XB10		95	x 95L
-65DZ-XB10		100	x 100L
-70DZ-XB10		105	x 105L
-75DZ		110	x 110L
-80DZ-XB10		115	x 115L
-85DZ-XB10		120	x 120L
-90DZ-XB10		125	x 125L
-95DZ-XB10		130	x 130L
-100DZ		135	x 135L

Cylinder model	C	D	Mounting bolt part no.
CQ2B40-5DZ	7.5	35	CQ-M5 x 35L
-10DZ		40	x 40L
-15DZ		45	x 45L
-20DZ		50	x 50L
-25DZ		55	x 55L
-30DZ		60	x 60L
-35DZ		65	x 65L
-40DZ		70	x 70L
-45DZ		75	x 75L
-50DZ		80	x 80L
-55DZ-XB10		95	x 95L
-60DZ-XB10		100	x 100L
-65DZ-XB10		105	x 105L
-70DZ-XB10		110	x 110L
-75DZ		115	x 115L
-80DZ-XB10		120	x 120L
-85DZ-XB10		125	x 125L
-90DZ-XB10		130	x 130L
-95DZ-XB10		135	x 135L
-100DZ		140	x 140L
CQ2B50-10DZ	12.5	45	CQ-M6 x 45L
-15DZ		50	x 50L
-20DZ		55	x 55L
-25DZ		60	x 60L
-30DZ		65	x 65L
-35DZ		70	x 70L
-40DZ		75	x 75L
-45DZ		80	x 80L
-50DZ		85	x 85L
-55DZ-XB10		100	x 100L
-60DZ-XB10		105	x 105L
-65DZ-XB10		110	x 110L
-70DZ-XB10		115	x 115L
-75DZ		120	x 120L
-80DZ-XB10		125	x 125L
-85DZ-XB10		130	x 130L
-90DZ-XB10		135	x 135L
-95DZ-XB10		140	x 140L
-100DZ		145	x 145L
CQ2B63-10DZ	14.5	50	CQ-M8 x 50L
-15DZ		55	x 55L
-20DZ		60	x 60L
-25DZ		65	x 65L
-30DZ		70	x 70L
-35DZ		75	x 75L
-40DZ		80	x 80L
-45DZ		85	x 85L
-50DZ		90	x 90L
-55DZ-XB10		105	x 105L
-60DZ-XB10		110	x 110L
-65DZ-XB10		115	x 115L
-70DZ-XB10		120	x 120L
-75DZ		125	x 125L
-80DZ-XB10		130	x 130L
-85DZ-XB10		135	x 135L
-90DZ-XB10		140	x 140L
-95DZ-XB10		145	x 145L
-100DZ		150	x 150L

Cylinder model	C	D	Mounting bolt part no.
CQ2B80-10DZ	15	55	CQ-M10 x 55L
-15DZ		60	x 60L
-20DZ		65	x 65L
-25DZ		70	x 70L
-30DZ		75	x 75L
-35DZ		80	x 80L
-40DZ		85	x 85L
-45DZ		90	x 90L
-50DZ		95	x 95L
-55DZ-XB10		110	x 110L
-60DZ-XB10		115	x 115L
-65DZ-XB10		120	x 120L
-70DZ-XB10		125	x 125L
-75DZ		130	x 130L
-80DZ-XB10		135	x 135L
-85DZ-XB10		140	x 140L
-90DZ-XB10		145	x 145L
-95DZ-XB10		150	x 150L
-100DZ		155	x 155L
CQ2B100-10DZ	15.5	65	CQ-M10 x 65L
-15DZ		70	x 70L
-20DZ		75	x 75L
-25DZ		80	x 80L
-30DZ		85	x 85L
-35DZ		90	x 90L
-40DZ		95	x 95L
-45DZ		100	x 100L
-50DZ		105	x 105L
-55DZ-XB10		120	x 120L
-60DZ-XB10		125	x 125L
-65DZ-XB10		130	x 130L
-70DZ-XB10		135	x 135L
-75DZ		140	x 140L
-80DZ-XB10		145	x 145L
-85DZ-XB10		150	x 150L
-90DZ-XB10		155	x 155L
-95DZ-XB10		160	x 160L
-100DZ		165	x 165L

Construction

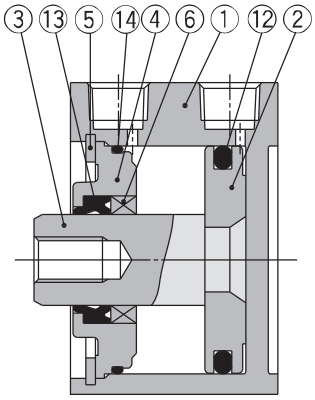

Standard

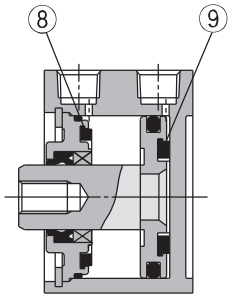

With rubber bumper

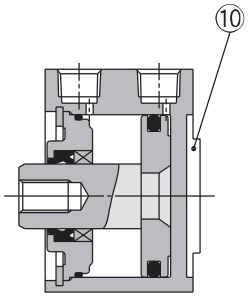

With boss on head side

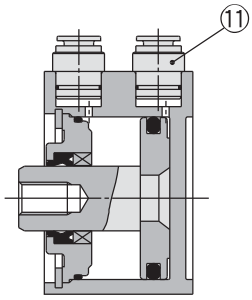

Built-in one-touch fittings

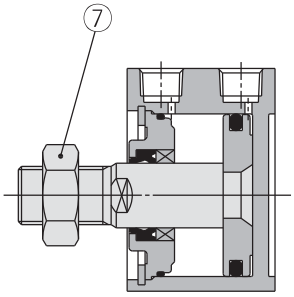

Rod end male thread

Component Parts

No.	Description	Material	Note
1	**Cylinder tube**	Aluminum alloy	Hard anodised
2	**Piston**	Aluminum alloy	Chromated
3	**Piston rod**	Stainless steel	ø12 to ø25
		Carbon steel	ø32 to ø100, Hard chrome plated
4	**Collar**	Aluminum alloy	ø12 to ø40, Anodised
		Aluminum alloy casted	ø50 to ø100, Chromated, Painted
5	**Retaining ring**	Carbon tool steel	Phosphate coated
6	**Bushing**	Bearing alloy	For ø50 or more only
7	**Rod end nut**	Carbon steel	Nickel plated
8	**Bumper A**	Urethane	

No.	Description	Material	Note
9	**Bumper B**	Urethane	
10	**Centering location ring**	Aluminum alloy	ø20 to ø100, Hard anodised
11	**One-touch fitting**	—	ø32 to ø63
12	**Piston seal**	NBR	
13	**Rod seal**	NBR	
14	**Gasket**	NBR	

Replacement Parts/Seal Kit (Pneumatic type)

Bore size (mm)	Kit no.	Contents
12	CQ2B12-PS	Kits include items ⑫, ⑬, ⑭ from the table.
16	CQ2B16-PS	
20	CQ2B20-PS	
25	CQ2B25-PS	
32	CQ2B32-PS	
40	CQ2B40-PS	
50	CQ2B50-PS	
63	CQ2B63-PS	
80	CQ2B80-PS	
100	CQ2B100-PS	

∗ Seal kit includes ⑫, ⑬, ⑭. Order the seal kit, based on each bore size.
∗ Since the seal kit does not include a grease pack, order it separately.
Grease pack part no.: GR-S-010 (10 g)

Replacement Parts/Seal Kit (Air-hydro type)

Bore size (mm)	Kit no.	Contents
20	CQ2BH20-PS	Kits include items ⑫, ⑬, ⑭ from the table.
25	CQ2BH25-PS	
32	CQ2BH32-PS	
40	CQ2BH40-PS	
50	CQ2BH50-PS	
63	CQ2BH63-PS	
80	CQ2BH80-PS	
100	CQ2BH100-PS	

∗ Seal kit includes ⑫, ⑬, ⑭. Order the seal kit, based on each bore size.
∗ Since the seal kit does not include a grease pack, order it separately.
Grease pack part no.: GR-S-010 (10 g)

Clean Series

10 – C□Q2B Bore size – Stroke D(M)Z

Clean series

10	Relief type
11	Vacuum type

ø12, ø16, ø20, ø25, ø32
ø40, ø50, ø63, ø80, ø100

Applicable for using inside the clean room graded Class 100 by making an actuator's rod section a double seal construction and discharging by relief port directly to the outside of clean room.

Specifications

Bore size (mm)	12	16	20	25	32	40	50	63	80	100
Action	Double acting, Single rod									
Proof pressure	1.5 MPa									
Maximum operating pressure	1.0 MPa									
Cushion	None Note)									
Piston speed	30 to 400 mm/s								30 to 300 mm/s	
Mounting	Through-hole									

Note) ø12 with auto switch: With rubber bumper (Standard)

For details, refer to the separate catalogue (CAT.E02-23), "Pneumatics Equipment for Clean Room."

Construction

10-CQ2 series (Double seal)

A relief port is provided in the area between the double rod seals to discharge the exhaust air outside of the clean room. Thus, the amount of dust generated has been reduced to 1/20 of that of an ordinary cylinder.

Relief port

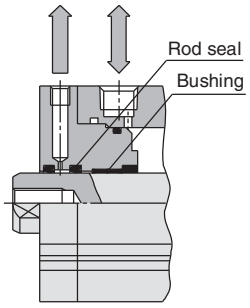

11-CQ2 series (Single seal, Vacuum suction)

Structurally identical to the "10-" series, the outer rod seal has been removed to evacuate through the vacuum port. This draws out any external air from the clearance between the rod and the cover to practically eliminate the generation of external dust. This should be used in an application that requires an even higher level of cleanliness than the 10- series.

Vacuum port (Vacuum suction)

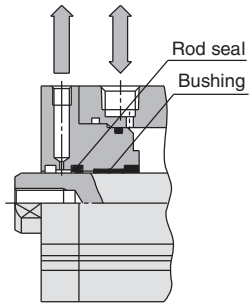

Copper and Fluorine-free Series (For CRT Manufacturing Process)

20 – C□Q2B Bore size – Stroke D(C)(M)Z

Copper and fluorine-free series

ø12, ø16, ø20, ø25, ø32
ø40, ø50, ø63, ø80, ø100

For preventing the influence of copper ions or halogen ions during CRT manufacturing processes, copper and fluorine materials are not used in the component parts.

Specifications

Bore size (mm)	12	16	20	25	32	40	50	63	80	100
Action	Double acting, Single rod									
Proof pressure	1.5 MPa									
Maximum operating pressure	1.0 MPa									
Cushion	None/Rubber bumper									
Piston speed	50 to 500 mm/s									
Mounting	Through-hole/Both ends tapped									

Water Resistant

Refer to pages 178 to 190 for details.

CDQ2 [Mounting] [Bore size] **R** – [Stroke] **D** [Option] **Z** – **M9BAL** **-XC6** [ ]

- **With auto switch** (Built-in magnet)
- **Water resistant cylinder**

R	NBR seals (Nitrile rubber)
V	FKM seals (Fluororubber)

- **Water resistant 2-colour indication solid state auto switch**
- **Made to Order**
- **Suffix**

–	Piston rod/Retaining ring/Rod end nut material: Stainless steel
A	Piston rod/Rod end nut/Cover holding bolt material: Stainless steel

Note) -XC6A: ø20 to ø32 only

Ideal for use under the atmosphere having coolant for machine tools, etc. Compatible for the environment, where waterdrops are splashed around the food processing machinery and the car washers, etc.

Specifications

Bore size (mm)	20	25	32	40	50	63	80	100
Action	Double acting, Single rod							
Cushion	None							
Made to Order	Piston rod/Retaining ring/Rod end nut material: Stainless steel (-XC6)							

∗ The specifications other than above are the same as those of the standard.
Some dimensions may vary from those of the standard. Refer to page 178 for details.

Compact Cylinder with Stable Lubrication Function (Lube-retainer)

CDQ2 [Mounting style] [Bore size] **M** – [Stroke] **D** [Body option] **Z** [Mounting bolt] [Rod end thread] – [Auto switch]

- **With auto switch** (Built-in magnet)
- **With stable lubrication function (Lube-retainer)**

∗ Available only for with auto switch.

Specifications

Bore size (mm)	32, 40, 50, 63, 80, 100
Action	Double acting, Single rod
Minimum operating pressure	0.1 MPa
Piston speed	50 to 500 mm/s
Cushion	None

∗ Specifications other than those shown above are the same as the standard model.

Dimensions (Dimensions other than those shown below are the same as the standard model.)

ø32 to ø100

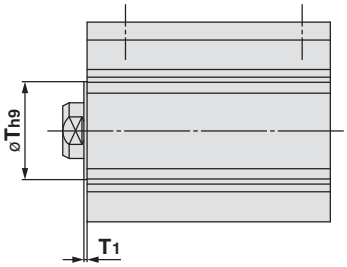

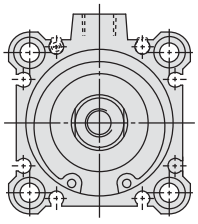

DMZ: Rod end male thread

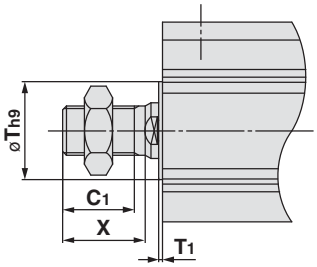

(mm)

Bore size	T	T1	C1	X
32	22	1	20.5	23.5
40	28	1	20.5	23.5
50	35	2	24	26.5
63	35	2	24	26.5
80	—	—	32.5	35.5
100	—	—	32.5	35.5

∗ The mounting dimensions of the mounting bracket are the same as the standard model.

Standard: Double Acting, Single Rod
Series CDQ2
With Auto Switch

Refer to the below pages for further information on auto switches.

Auto switch proper mounting position and its mounting height	P.193 to 199
Minimum stroke for auto switch mounting	
Operating range	
Auto switch mounting brackets/Part no.	

Weight

Weight

(g)

Bore size (mm)	Cylinder stroke (mm)											
	5	10	15	20	25	30	35	40	45	50	75	100
12	43	49	55	61	67	73	—	—	—	—	—	—
16	64	71	79	87	95	102	—	—	—	—	—	—
20	94	106	118	131	143	155	167	179	191	203	—	—
25	134	149	164	180	195	210	226	241	256	272	—	—
32	182	202	222	241	261	281	300	320	340	359	459	558
40	269	290	312	333	355	376	398	420	441	463	575	687
50	—	455	488	521	554	587	620	653	686	719	891	1062
63	—	627	665	703	741	779	817	855	893	931	1129	1326
80	—	1162	1222	1282	1342	1403	1463	1524	1584	1644	1941	2237
100	—	1966	2047	2127	2208	2288	2368	2449	2529	2610	3018	3426

Additional Weight

(g)

Bore size (mm)		12	16	20	25	32	40	50	63	80	100
Both ends tapped		1	1	3	3	6	6	6	19	45	45
Rod end male thread	Male thread	1.5	3	6	12	26	27	53	53	120	175
	Nut	1	2	4	8	17	17	32	32	49	116
With boss on head end		0.7	1.3	2	3	5	7	13	25	45	96
With rubber bumper		0	0	–2	–3	–3	–7	–9	–18	–31	–56
Built-in one-touch fittings		—	—	—	—	12	12	21	21	—	—
Foot (Including mounting bolts)		49	62	147	169	142	154	243	317	683	1052
Compact foot (Including mounting bolts)		32	40	97	116	99	114	117	241	501	770
Rod flange (Including mounting bolts)		54	67	131	153	180	214	373	559	1056	1365
Head flange (Including mounting bolts)		52	63	124	144	165	198	348	534	1017	1309
Double clevis (Including pin, retaining rings, bolts)		29	35	78	114	151	196	393	554	1109	1887

Calculation: (Example) **CDQ2D32-20DCMZ**

- Basic weight: CDQ2B32-20DZ····· 241 g
- Additional weight: Both ends tapped ····· 6 g
  Rod end male thread ····· 43 g
  With rubber bumper ····· –3 g
  Double clevis ·····151 g
  438 g

Add each weight of auto switches when auto switches are mounted.

Construction

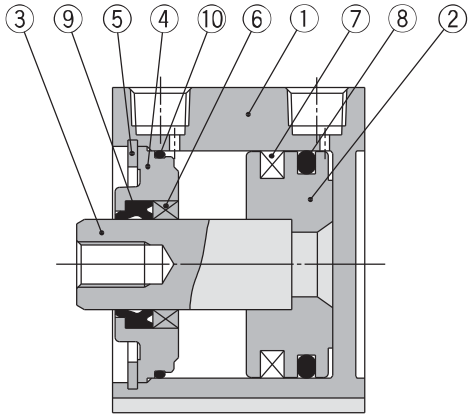

Component Parts

No.	Description	Material	Note
1	**Cylinder tube**	Aluminum alloy	Hard anodised
2	**Piston**	Aluminum alloy	Chromated
3	**Piston rod**	Stainless steel	ø12 to ø25
		Carbon steel	ø32 to ø100, Hard chrome plated
4	**Collar**	Aluminum alloy	ø12 to ø40, Anodised
		Aluminum alloy casted	ø50 to ø100, Chromated, Painted
5	**Retaining ring**	Carbon tool steel	Phosphate coated
6	**Bushing**	Bearing alloy	For ø50 or more only
7	**Magnet**	–	
8	**Piston seal**	NBR	
9	**Rod seal**	NBR	
10	**Gasket**	NBR	

Replacement Parts/Seal Kit (Pneumatic type)

Bore size (mm)	Kit no.	Contents
12	CQ2B12-PS	Kits include items ⑧, ⑨, ⑩ from the table.
16	CQ2B16-PS	
20	CQ2B20-PS	
25	CQ2B25-PS	
32	CQ2B32-PS	
40	CQ2B40-PS	
50	CQ2B50-PS	
63	CQ2B63-PS	
80	CQ2B80-PS	
100	CQ2B100-PS	

∗ Seal kit includes ⑧, ⑨, ⑩. Order the seal kit, based on each bore size.
∗ Since the seal kit does not include a grease pack, order it separately.
Grease pack part no.: GR-S-010 (10 g)

Replacement Parts/Seal Kit (Air-hydro type)

Bore size (mm)	Kit no.	Contents
20	CQ2BH20-PS	Kits include items ⑧, ⑨, ⑩ from the table.
25	CQ2BH25-PS	
32	CQ2BH32-PS	
40	CQ2BH40-PS	
50	CQ2BH50-PS	
63	CQ2BH63-PS	
80	CQ2BH80-PS	
100	CQ2BH100-PS	

∗ Seal kit includes ⑧, ⑨, ⑩. Order the seal kit, based on each bore size.
∗ Since the seal kit does not include a grease pack, order it separately.
Grease pack part no.: GR-S-010 (10 g)

Mounting Bolt for CDQ2B/With Auto Switch

Mounting method: Mounting bolt for through-hole mounting of the CDQ2B is available as an option. Refer to the following for ordering procedures. Order the actual number of bolts that will be used.

Example) CQ-M3 x 35L 2 pcs.

Material: Chromium molybdenum steel
Surface treatment: Zinc chromated

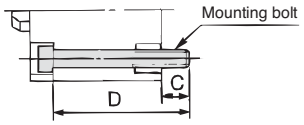

Cylinder model	C	D	Mounting bolt part no.
CDQ2B12-5DZ	5.5	35	CQ-M3 x 35L
-10DZ		40	x 40L
-15DZ		45	x 45L
-20DZ		50	x 50L
-25DZ		55	x 55L
-30DZ		65	x 60L
CDQ2B16-5DZ	8	40	CQ-M3 x 40L
-10DZ		45	x 45L
-15DZ		50	x 50L
-20DZ		55	x 55L
-25DZ		60	x 60L
-30DZ		65	x 65L
CDQ2B20-5DZ	10.5	40	CQ-M5 x 40L
-10DZ		45	x 45L
-15DZ		50	x 50L
-20DZ		55	x 55L
-25DZ		60	x 60L
-30DZ		65	x 65L
-35DZ		70	x 70L
-40DZ		75	x 75L
-45DZ		80	x 80L
-50DZ		85	x 85L
CDQ2B25-5DZ	9.5	40	CQ-M5 x 40L
-10DZ		45	x 45L
-15DZ		50	x 50L
-20DZ		55	x 55L
-25DZ		60	x 60L
-30DZ		65	x 65L
-35DZ		70	x 70L
-40DZ		75	x 75L
-45DZ		80	x 80L
-50DZ		85	x 85L
CDQ2B32-5DZ	9	40	CQ-M5 x 40L
-10DZ		45	x 45L
-15DZ		50	x 50L
-20DZ		55	x 55L
-25DZ		60	x 60L
-30DZ		65	x 65L
-35DZ		70	x 70L
-40DZ		75	x 75L
-45DZ		80	x 80L
-50DZ		85	x 85L
-55DZ-XB10		90	x 90L
-60DZ-XB10		95	x 95L
-65DZ-XB10		100	x 100L
-70DZ-XB10		105	x 105L
-75DZ		110	x 110L
-80DZ-XB10		115	x 115L
-85DZ-XB10		120	x 120L
-90DZ-XB10		125	x 125L
-95DZ-XB10		130	x 130L
-100DZ		135	x 135L

Cylinder model	C	D	Mounting bolt part no.
CDQ2B40-5DZ	7.5	45	CQ-M5 x 45L
-10DZ		50	x 50L
-15DZ		55	x 55L
-20DZ		60	x 60L
-25DZ		65	x 65L
-30DZ		70	x 70L
-35DZ		75	x 75L
-40DZ		80	x 80L
-45DZ		85	x 85L
-50DZ		90	x 90L
-55DZ-XB10		95	x 95L
-60DZ-XB10		100	x 100L
-65DZ-XB10		105	x 105L
-70DZ-XB10		110	x 110L
-75DZ		115	x 115L
-80DZ-XB10		120	x 120L
-85DZ-XB10		125	x 125L
-90DZ-XB10		130	x 130L
-95DZ-XB10		135	x 135L
-100DZ		140	x 140L
CDQ2B50-10DZ	12.5	55	CQ-M6 x 55L
-15DZ		60	x 60L
-20DZ		65	x 65L
-25DZ		70	x 70L
-30DZ		75	x 75L
-35DZ		80	x 80L
-40DZ		85	x 85L
-45DZ		90	x 90L
-50DZ		95	x 95L
-55DZ-XB10		100	x 100L
-60DZ-XB10		105	x 105L
-65DZ-XB10		110	x 110L
-70DZ-XB10		115	x 115L
-75DZ		120	x 120L
-80DZ-XB10		125	x 125L
-85DZ-XB10		130	x 130L
-90DZ-XB10		135	x 135L
-95DZ-XB10		140	x 140L
-100DZ		145	x 145L
CDQ2B63-10DZ	14.5	60	CQ-M8 x 60L
-15DZ		65	x 65L
-20DZ		70	x 70L
-25DZ		75	x 75L
-30DZ		80	x 80L
-35DZ		85	x 85L
-40DZ		90	x 90L
-45DZ		95	x 95L
-50DZ		100	x 100L
-55DZ-XB10		105	x 105L
-60DZ-XB10		110	x 110L
-65DZ-XB10		115	x 115L
-70DZ-XB10		120	x 120L
-75DZ		125	x 125L
-80DZ-XB10		130	x 130L
-85DZ-XB10		135	x 135L
-90DZ-XB10		140	x 140L
-95DZ-XB10		145	x 145L
-100DZ		150	x 150L

Cylinder model	C	D	Mounting bolt part no.
CDQ2B80-10DZ	15	65	CQ-M10 x 65L
-15DZ		70	x 70L
-20DZ		75	x 75L
-25DZ		80	x 80L
-30DZ		85	x 85L
-35DZ		90	x 90L
-40DZ		95	x 95L
-45DZ		100	x 100L
-50DZ		105	x 105L
-55DZ-XB10		110	x 110L
-60DZ-XB10		115	x 115L
-65DZ-XB10		120	x 120L
-70DZ-XB10		125	x 125L
-75DZ		130	x 130L
-80DZ-XB10		135	x 135L
-85DZ-XB10		140	x 140L
-90DZ-XB10		145	x 145L
-95DZ-XB10		150	x 150L
-100DZ		155	x 155L
CDQ2B100-10DZ	15.5	75	CQ-M10 x 75L
-15DZ		80	x 80L
-20DZ		85	x 85L
-25DZ		90	x 90L
-30DZ		95	x 95L
-35DZ		100	x 100L
-40DZ		105	x 105L
-45DZ		110	x 110L
-50DZ		115	x 115L
-55DZ-XB10		120	x 120L
-60DZ-XB10		125	x 125L
-65DZ-XB10		130	x 130L
-70DZ-XB10		135	x 135L
-75DZ		140	x 140L
-80DZ-XB10		145	x 145L
-85DZ-XB10		150	x 150L
-90DZ-XB10		155	x 155L
-95DZ-XB10		160	x 160L
-100DZ		165	x 165L

Dimensions

ø12 to ø25/Without Auto Switch

Both ends tapped: CQ2A

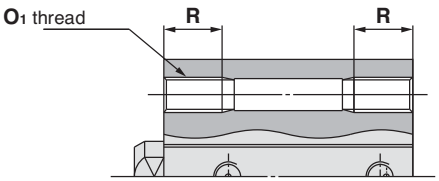

Both Ends Tapped (mm)

Bore size (mm)	O_1	R
12	M4 x 0.7	7
16	M4 x 0.7	7
20	M6 x 1.0	10
25	M6 x 1.0	10

Standard (Through-hole): CQ2B

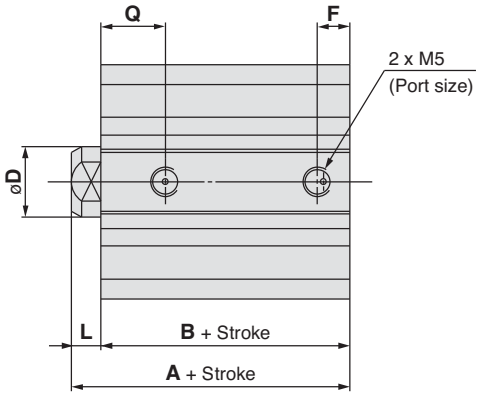

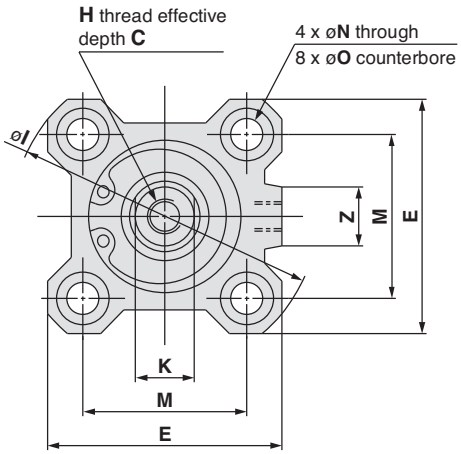

With boss on head side

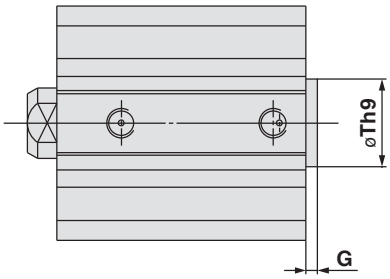

With Boss on Head side (mm)

Bore size (mm)	G	Th9
12	1.5	$15^{0}_{-0.043}$
16	1.5	$20^{0}_{-0.052}$
20	2	$13^{0}_{-0.043}$
25	2	$15^{0}_{-0.043}$

Note 1) With boss on rod end: Option (Suffix "-XC36" to the end of model number.)

Rod end male thread

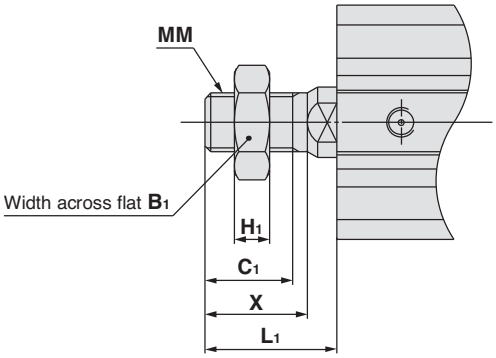

Rod End Male Thread (mm)

Bore size (mm)	B_1	C_1	H_1	L_1	MM	X
12	8	9	4	14	M5 x 0.8	10.5
16	10	10	5	15.5	M6 x 1.0	12
20	13	12	5	18.5	M8 x 1.25	14
25	17	15	6	22.5	M10 x 1.25	17.5

Standard (mm)

Bore size (mm)	Stroke range (mm)	A	B	C	D	E	F	H	I	K	L	M	N	O	Q	Z
12	5 to 30	20.5	17	6	6	25	5	M3 x 0.5	32	5	3.5	15.5	3.5	6.5 depth 3.5	7.5	–
16	5 to 30	22	18.5	8	8	29	5.5	M4 x 0.7	38	6	3.5	20	3.5	6.5 depth 3.5	8	10
20	5 to 50	24	19.5	7	10	36	5.5	M5 x 0.8	47	8	4.5	25.5	5.5	9 depth 7	8	10
25	5 to 50	27.5	22.5	12	12	40	5.5	M6 x 1.0	52	10	5	28	5.5	9 depth 7	9	10

Note 2) The external dimensions with rubber bumper are same as those of the standard, as shown above.
∗ For details about the rod end nut and accessory brackets, refer to page 23.
Note 3) For calculation on the longitudinal dimension of intermediate strokes, refer to page 3.

Foot: CQ2L

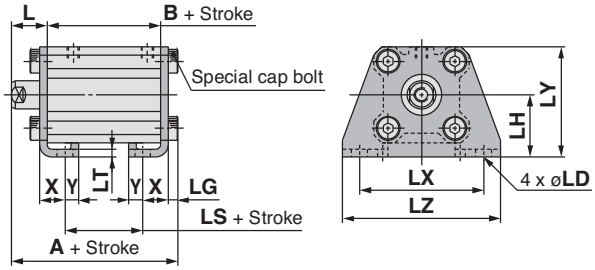

Foot

(mm)

Bore size (mm)	Stroke range (mm)	A	B	L	L_1	LD	LG	LH	LS	LT	LX	LY	LZ	X	Y
12	5 to 30	35.3	17	13.5	24	4.5	2.8	17	5	2	34	29.5	44	8	4.5
16	5 to 30	36.8	18.5	13.5	25.5	4.5	2.8	19	6.5	2	38	33.5	48	8	5
20	5 to 50	41.2	19.5	14.5	28.5	6.6	4	24	7.5	3.2	48	42	62	9.2	5.8
25	5 to 50	44.7	22.5	15	32.5	6.6	4	26	7.5	3.2	52	46	66	10.7	5.8

Foot bracket material: Carbon steel
Surface treatment: Nickel plated

Rod end male thread

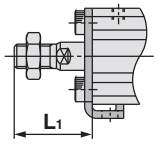

Compact foot: CQ2LC

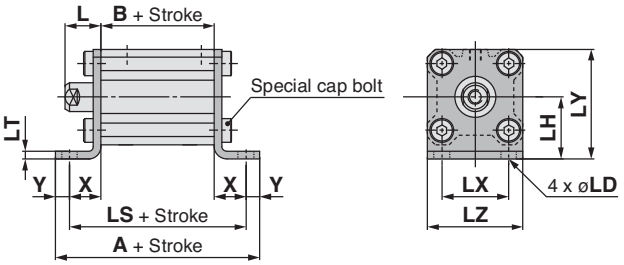

Compact Foot

(mm)

Bore size (mm)	Stroke range (mm)	A	B	L	L_1	LD	LH	LS	LT	LX	LY	LZ	X	Y
12	5 to 30	44.6	17	13.5	24	4.5	17	35.6	2	15.5	29.5	25	9.3	4.5
16	5 to 30	47.1	18.5	13.5	25.5	4.5	19	37.1	2	20	33.5	29	9.3	5
20	5 to 50	57.5	19.5	14.5	28.5	6.6	24	45.9	3.2	25.5	42	36	13.2	5.8
25	5 to 50	60.5	22.5	15	32.5	6.6	26	48.9	3.2	28	46	40	13.2	5.8

Compact foot bracket material: Carbon steel
Surface treatment: Zinc chromated

Rod end male thread

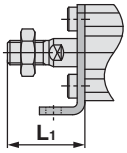

Rod flange: CQ2F

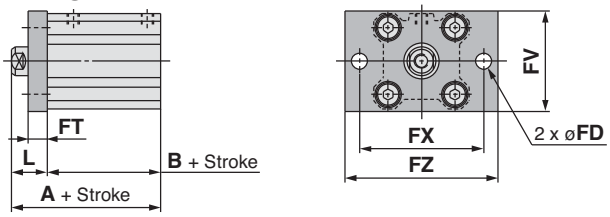

Rod Flange

(mm)

Bore size (mm)	Stroke range (mm)	A	B	FD	FT	FV	FX	FZ	L	L_1
12	5 to 30	30.5	17	4.5	5.5	25	45	55	13.5	24
16	5 to 30	32	18.5	4.5	5.5	30	45	55	13.5	25.5
20	5 to 50	34	19.5	6.6	8	39	48	60	14.5	28.5
25	5 to 50	37.5	22.5	6.6	8	42	52	64	15	32.5

Flange bracket material: Carbon steel
Surface treatment: Nickel plated

Rod end male thread

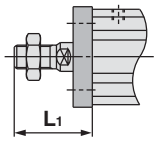

Head flange: CQ2G

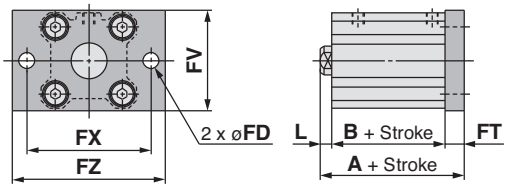

Head Flange

(mm)

Bore size (mm)	Stroke range (mm)	A	L	L_1
12	5 to 30	26	3.5	14
16	5 to 30	27.5	3.5	15.5
20	5 to 50	32	4.5	18.5
25	5 to 50	35.5	5	22.5

Flange bracket material: Carbon steel
Surface treatment: Nickel plated

(* The dimensions except A, L and L_1 are the same as those of the rod flange.)

Rod end male thread

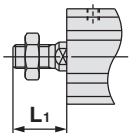

Double clevis: CQ2D

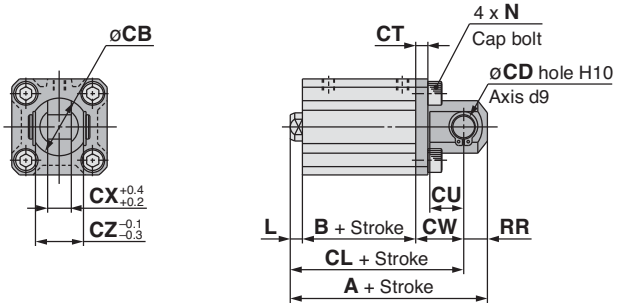

Rod end male thread

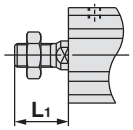

Double Clevis

(mm)

Bore size (mm)	Stroke range (mm)	A	B	CB	CD	CL	CT	CU	CW	CX	CZ	L	L_1	N	RR
12	5 to 30	40.5	17	12	5	34.5	4	7	14	5	10	3.5	14	M4 x 0.7	6
16	5 to 30	43	18.5	14	5	37	4	10	15	6.5	12	3.5	15.5	M4 x 0.7	6
20	5 to 50	51	19.5	20	8	42	5	12	18	8	16	4.5	18.5	M6 x 1.0	9
25	5 to 50	57.5	22.5	24	10	47.5	5	14	20	10	20	5	22.5	M6 x 1.0	10

Double clevis bracket material: Carbon steel
Surface treatment: Nickel plated

∗ For details about the rod end nut and accessory brackets, refer to page 23.
∗ Double clevis pin and retaining rings are included.

ø12 to ø25/With Auto Switch

Both ends tapped: CDQ2A

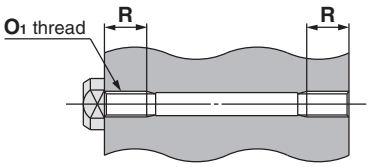

Both Ends Tapped (mm)

Bore size (mm)	O_1	R
12	M4 x 0.7	7
16	M4 x 0.7	7
20	M6 x 1.0	10
25	M6 x 1.0	10

Standard (Through-hole): CDQ2B

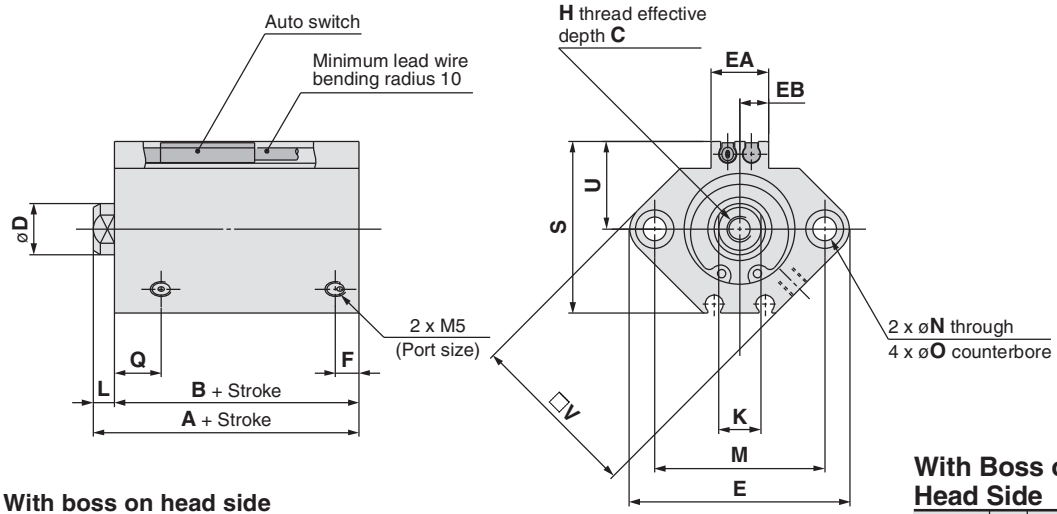

ø16 to ø25

With boss on head side

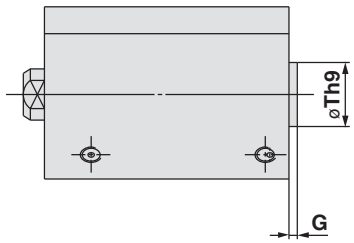

With Boss on Head Side (mm)

Bore size (mm)	G	Th9
12	1.5	$15^{0}_{-0.043}$
16	1.5	$20^{0}_{-0.052}$
20	2	$13^{0}_{-0.043}$
25	2	$15^{0}_{-0.043}$

Note 1) With boss on rod end: Option (Suffix "-XC36" to the end of model number.)

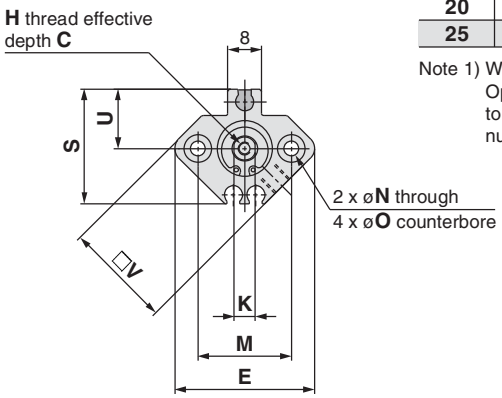

ø12

Rod end male thread

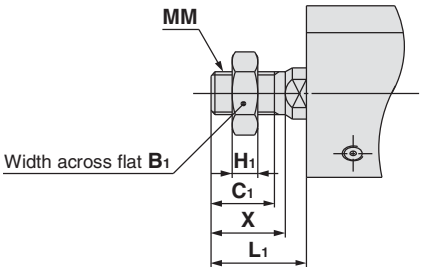

Rod End Male Thread (mm)

Bore size (mm)	B_1	C_1	H_1	L_1	MM	X
12	8	9	4	14	M5 x 0.8	10.5
16	10	10	5	15.5	M6 x 1.0	12
20	13	12	5	18.5	M8 x 1.25	14
25	17	15	6	22.5	M10 x 1.25	17.5

Standard For auto switch proper mounting position and its mounting height, refer to pages 193 to 199. (mm)

Bore size (mm)	Stroke range (mm)	A	B	C	D	E	EA	EB	F	H	K	L	M	N	O	Q	S	U	V
12	5 to 30	31.5	28	6	6	33	—	—	6.5	M3 x 0.5	5	3.5	22	3.5	6.5 depth 3.5	11	27.5	14	25
16	5 to 30	34	30.5	8	8	37	13.2	6.6	5.5	M4 x 0.7	6	3.5	28	3.5	6.5 depth 3.5	10	29.5	15	29
20	5 to 50	36	31.5	7	10	47	13.6	6.8	5.5	M5 x 0.8	8	4.5	36	5.5	9 depth 7	8	35.5	18	36
25	5 to 50	37.5	32.5	12	12	52	13.6	6.8	5.5	M6 x 1.0	10	5	40	5.5	9 depth 7	9	40.5	21	40

Note 2) The external dimensions with rubber bumper are same as those of the standard, as shown above.
∗ For details about the rod end nut and accessory brackets, refer to page 23.
Note 3) For calculation on the longitudinal dimension of intermediate strokes, refer to page 3.

Foot: CDQ2L

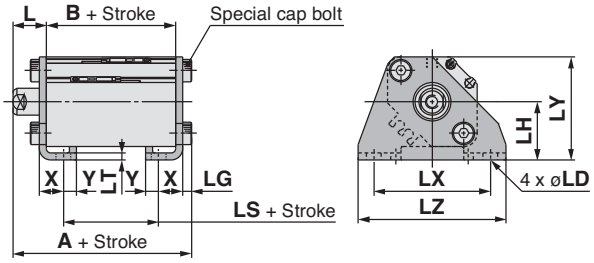

Rod end male thread

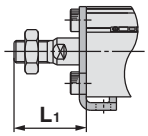

Foot

(mm)

Bore size (mm)	Stroke range (mm)	A	B	L	L_1	LD	LG	LH	LS	LT	LX	LY	LZ	X	Y
12	5 to 30	46.3	28	13.5	24	4.5	2.8	17	16	2	34	29.5	44	8	4.5
16	5 to 30	48.8	30.5	13.5	25.5	4.5	2.8	19	18.5	2	38	33.5	48	8	5
20	5 to 50	53.2	31.5	14.5	28.5	6.6	4	24	19.5	3.2	48	42	62	9.2	5.8
25	5 to 50	54.7	32.5	15	32.5	6.6	4	26	17.5	3.2	52	46	66	10.7	5.8

Foot bracket material: Carbon steel
Surface treatment: Nickel plated

Compact foot: CDQ2LC

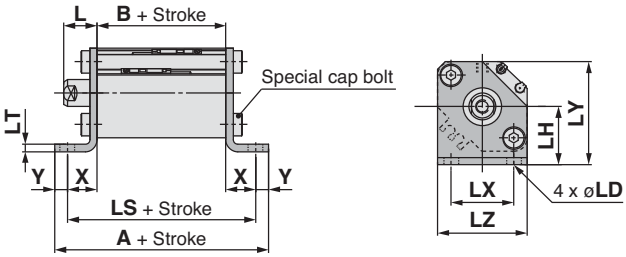

Rod end male thread

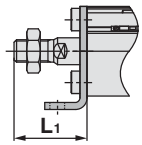

Compact Foot

(mm)

Bore size (mm)	Stroke range (mm)	A	B	L	L_1	LD	LH	LS	LT	LX	LY	LZ	X	Y
12	5 to 30	55.6	28	13.5	24	4.5	17	46.6	2	15.5	29.5	25	9.3	4.5
16	5 to 30	59.1	30.5	13.5	25.5	4.5	19	49.1	2	20	33.5	29	9.3	5
20	5 to 50	69.5	31.5	14.5	28.5	6.6	24	57.9	3.2	25.5	42	36	13.2	5.8
25	5 to 50	70.5	32.5	15	32.5	6.6	26	58.9	3.2	28	46	40	13.2	5.8

Compact foot bracket material: Carbon steel
Surface treatment: Zinc chromated

Rod flange: CDQ2F

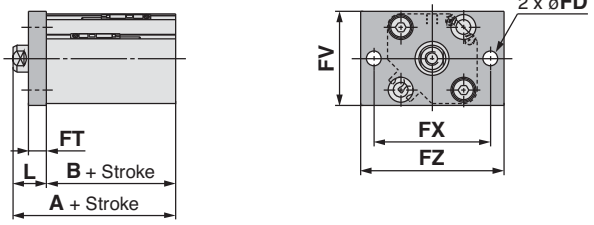

Rod end male thread

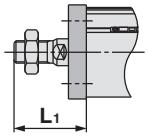

Rod Flange

(mm)

Bore size (mm)	Stroke range (mm)	A	B	FD	FT	FV	FX	FZ	L	L_1
12	5 to 30	41.5	28	4.5	5.5	25	45	55	13.5	24
16	5 to 30	44	30.5	4.5	5.5	30	45	55	13.5	25.5
20	5 to 50	46	31.5	6.6	8	39	48	60	14.5	28.5
25	5 to 50	47.5	32.5	6.6	8	42	52	64	15	32.5

Flange bracket material: Carbon steel
Surface treatment: Nickel plated

Head flange: CDQ2G

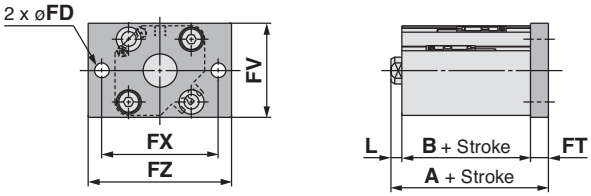

Rod end male thread

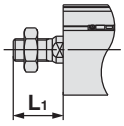

Head Flange

(mm)

Bore size (mm)	Stroke range (mm)	A	L	L_1
12	5 to 30	37	3.5	14
16	5 to 30	39.5	3.5	15.5
20	5 to 50	44	4.5	18.5
25	5 to 50	45.5	5	22.5

(∗ The dimensions except A, L and L_1 are the same as those of the rod flange.)

Flange bracket material: Carbon steel
Surface treatment: Nickel plated

Double clevis: CDQ2D

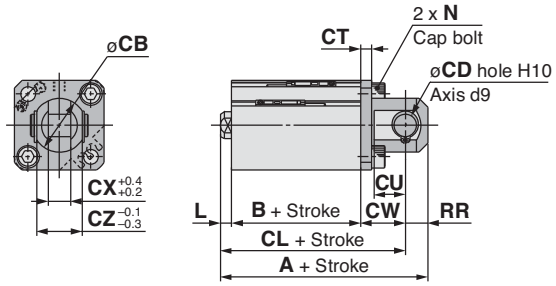

Rod end male thread

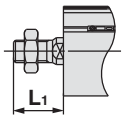

Double Clevis

(mm)

Bore size (mm)	Stroke range (mm)	A	B	CB	CD	CL	CT	CU	CW	CX	CZ	L	L_1	N	RR
12	5 to 30	51.5	28	12	5	45.5	4	7	14	5	10	3.5	14	M4 x 0.7	6
16	5 to 30	55	30.5	14	5	49	4	10	15	6.5	12	3.5	15.5	M4 x 0.7	6
20	5 to 50	63	31.5	20	8	54	5	12	18	8	16	4.5	18.5	M6 x 1.0	9
25	5 to 50	67.5	32.5	24	10	57.5	5	14	20	10	20	5	22.5	M6 x 1.0	10

Double clevis bracket material: Carbon steel
Surface treatment: Nickel plated

∗ For details about the rod end nut and accessory brackets, refer to page 23.
∗ Double clevis pin and retaining rings are included.

Dimensions

ø32 to ø50/With Auto Switch

(In the case of without auto switches, the A, B, F, P and Q dimensions will be only changed. Refer to the dimension table.)

Both ends tapped: CQ2A/CDQ2A

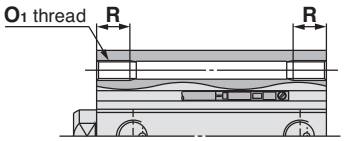

Both Ends Tapped (mm)

Bore size (mm)	O_1	R
32	M6 x 1.0	10
40	M6 x 1.0	10
50	M8 x 1.25	14

Standard (Through-hole): CQ2B/CDQ2B

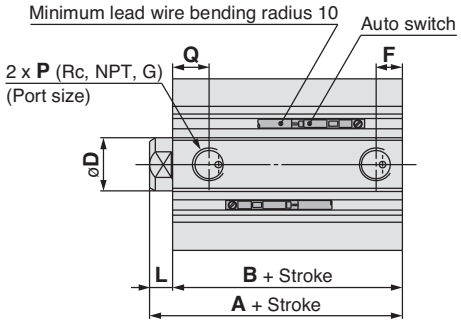

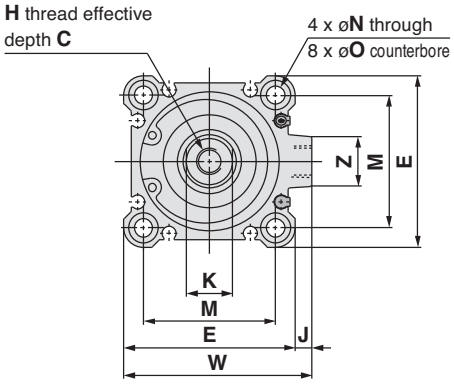

With boss on head side

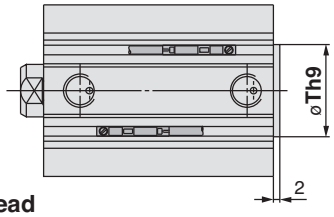

With Boss on Head Side (mm)

Bore size (mm)	Th9
32	$21^{0}_{-0.052}$
40	$28^{0}_{-0.052}$
50	$35^{0}_{-0.062}$

Note 1) With boss on rod end: Option (Suffix "-XC36" to the end of model number.)

Rod end male thread

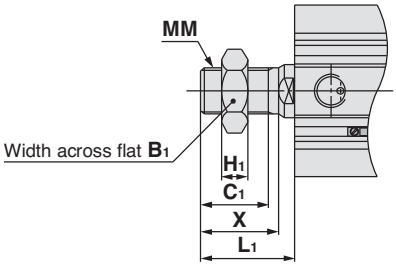

Rod End Male Thread (mm)

Bore size (mm)	B_1	C_1	H_1	L_1	MM	X
32	22	20.5	8	28.5	M14 x 1.5	23.5
40	22	20.5	8	28.5	M14 x 1.5	23.5
50	27	26	11	33.5	M18 x 1.5	28.5

Built-in one-touch fittings: ø32 to ø50

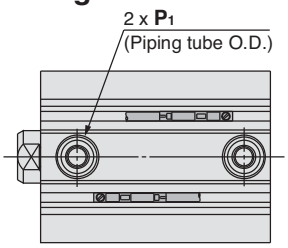

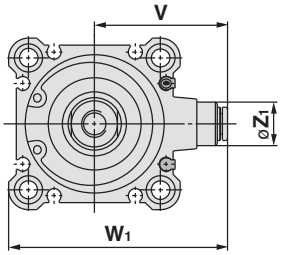

Built-in One-touch Fittings (mm)

Bore size (mm)	Z_1	P_1	V	W_1
32	13	6	36.5	59
40	13	6	40.5	66
50	16	8	50	82

Standard

For auto switch proper mounting position and its mounting height, refer to pages 193 to 199. (mm)

Bore size (mm)	Stroke range (mm)	Without auto switch					With auto switch					C	D	E	H	J	K	L	M	N
		A	B	F	P	Q	A	B	F	P	Q									
32	5	30	23	5.5	M5 x 0.8	10	40	33	7.5	1/8	10	13	16	45	M8 x 1.25	4.5	14	7	34	5.5
	10 to 50			7.5	1/8															
	75, 100	40	33																	
40	5 to 50	36.5	29.5	7.5	1/8	12.5	46.5	39.5	7.5	1/8	12.5	13	16	52	M8 x 1.25	5	14	7	40	5.5
	75, 100	46.5	39.5																	
50	10 to 50	38.5	30.5	10.5	1/4	10.5	48.5	40.5	10.5	1/4	10.5	15	20	64	M10 x 1.5	7	17	8	50	6.6
	75, 100	48.5	40.5																	

Bore size (mm)	O	W	Z
32	9 depth 7	49.5	14
40	9 depth 7	57	15
50	11 depth 8	71	19

Note 2) The external dimensions with rubber bumper are same as those of the standard, as shown above.
∗ For details about the rod end nut and accessory brackets, refer to page 23.
Note 3) For calculation on the longitudinal dimension of intermediate strokes, refer to page 3. The spacer-installed type (Standard, -XB10A) and the exclusive body type (-XB10) are available.

Foot: CQ2L/CDQ2L

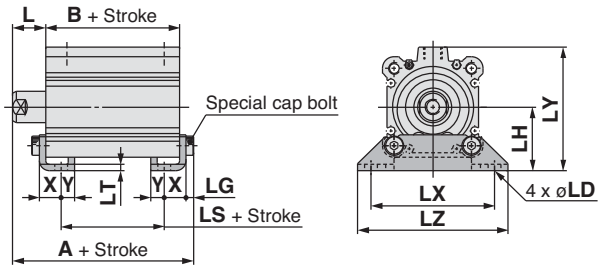

Rod end male thread

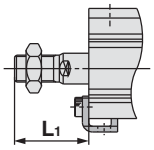

Compact foot: CQ2LC/CDQ2LC

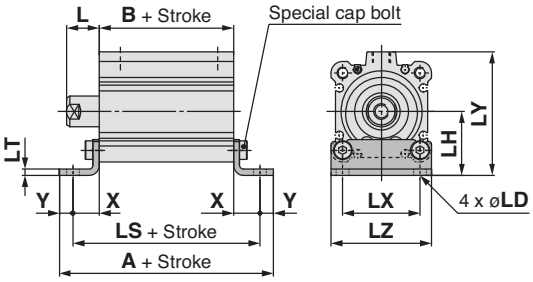

Rod end male thread

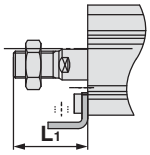

Rod flange: CQ2F/CDQ2F

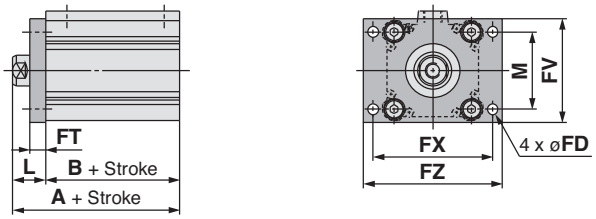

Rod end male thread

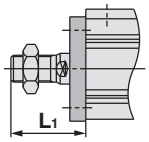

Head flange: CQ2G/CDQ2G

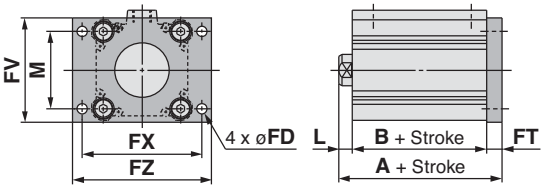

Rod end male thread

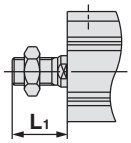

Foot

(mm)

Bore size (mm)	Stroke range (mm)	Without auto switch A	Without auto switch B	Without auto switch LS	With auto switch A	With auto switch B	With auto switch LS	L	L_1	LD	LG	LH	LT	LX	LY
32	5 to 50	47.2	23	7	57.2	33	17	17	38.5	6.6	4	30	3.2	57	57
	75, 100	57.2	33	17											
40	5 to 50	53.7	29.5	13.5	63.7	39.5	23.5	17	38.5	6.6	4	33	3.2	64	64
	75, 100	63.7	39.5	23.5											
50	10 to 50	56.7	30.5	7.5	66.7	40.5	17.5	18	43.5	9	5	39	3.2	79	78
	75, 100	66.7	40.5	17.5											

Foot bracket material: Carbon steel
Surface treatment: Nickel plated

Bore size (mm)	LZ	X	Y
32	71	11.2	5.8
40	78	11.2	7
50	95	14.7	8

Compact Foot

(mm)

Bore size (mm)	Stroke range (mm)	Without auto switch A	Without auto switch B	Without auto switch LS	With auto switch A	With auto switch B	With auto switch LS	L	L_1	LD	LH	LT	LX	LY	LZ
32	5 to 50	62	23	50.4	72	33	60.4	17	38.5	6.6	30	3.2	34	57	45
	75, 100	72	33	60.4											
40	5 to 50	70.9	29.5	56.9	80.9	39.5	66.9	17	38.5	6.6	33	3.2	40	64	52
	75, 100	80.9	39.5	66.9											
50	10 to 50	79.9	30.5	63.9	89.9	40.5	73.9	18	43.5	9	39	3.2	50	78	64
	75, 100	89.9	40.5	73.9											

Compact foot bracket material: Carbon steel
Surface treatment: Zinc chromated

Bore size (mm)	X	Y
32	13.7	5.8
40	13.7	7
50	16.7	8

Rod Flange

(mm)

Bore size (mm)	Stroke range (mm)	Without auto switch A	Without auto switch B	With auto switch A	With auto switch B	FD	FT	FV	FX	FZ	L	L_1	M
32	5 to 50	40	23	50	33	5.5	8	48	56	65	17	38.5	34
	75, 100	50	33										
40	5 to 50	46.5	29.5	56.5	39.5	5.5	8	54	62	72	17	38.5	40
	75, 100	56.5	39.5										
50	10 to 50	48.5	30.5	58.5	40.5	6.6	9	67	76	89	18	43.5	50
	75, 100	58.5	40.5										

Flange bracket material: Carbon steel
Surface treatment: Nickel plated

Head Flange

(mm)

Bore size (mm)	Stroke range (mm)	Without auto switch A	With auto switch A	L	L_1
32	5 to 50	38	48	7	28.5
	75, 100	48			
40	5 to 50	44.5	54.5	7	28.5
	75, 100	54.5			
50	10 to 50	47.5	57.5	8	33.5
	75, 100	57.5			

Flange bracket material: Carbon steel
Surface treatment: Nickel plated

(* The dimensions except A, L and L_1 are the same as those of the rod flange.)

Double clevis: CQ2D/CDQ2D

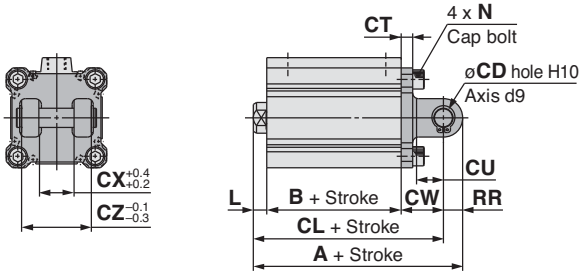

Rod end male thread

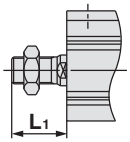

Double Clevis

(mm)

Bore size (mm)	Stroke range (mm)	Without auto switch A	Without auto switch B	Without auto switch CL	With auto switch A	With auto switch B	With auto switch CL	CD	CT	CU	CW	CX	CZ	L	L_1
32	5 to 50	60	23	50	70	33	60	10	5	14	20	18	36	7	28.5
	75, 100	70	33	60											
40	5 to 50	68.5	29.5	58.5	78.5	39.5	68.5	10	6	14	22	18	36	7	28.5
	75, 100	78.5	39.5	68.5											
50	10 to 50	80.5	30.5	66.5	90.5	40.5	76.5	14	7	20	28	22	44	8	33.5
	75, 100	90.5	40.5	76.5											

Double clevis bracket material: Cast iron
Surface treatment: Painted

Bore size (mm)	N	RR
32	M6 x 1.0	10
40	M6 x 1.0	10
50	M8 x 1.25	14

∗ For details about the rod end nut and accessory brackets, refer to page 23.
∗ Double clevis pin and retaining rings are included.

Dimensions

ø63 to ø100/With Auto Switch

(In the case of without auto switches, the A, B dimensions will be only changed. Refer to the dimension table.)

Both ends tapped: CQ2A/CDQ2A

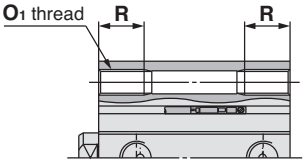

Both Ends Tapped (mm)

Bore size (mm)	O_1	R
63	M10 x 1.5	18
80	M12 x 1.75	22
100	M12 x 1.75	22

Standard (Through-hole): CQ2B/CDQ2B

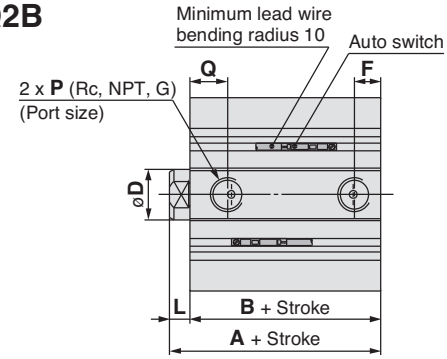

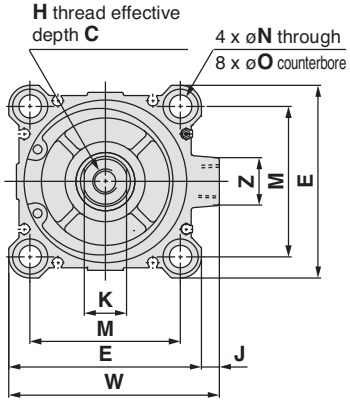

With boss on head end

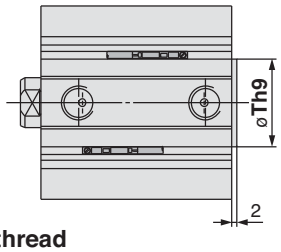

With Boss on Head Side (mm)

Bore size (mm)	Th9
63	$35^{0}_{-0.062}$
80	$43^{0}_{-0.062}$
100	$59^{0}_{-0.074}$

Note 1) With boss on rod end: Option (Suffix "-XC36" to the end of model number.)

Rod end male thread

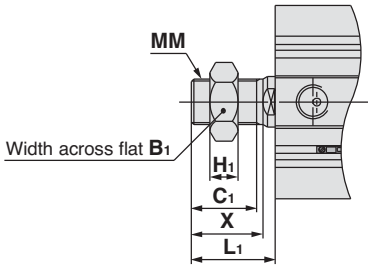

Rod End Male Thread (mm)

Bore size (mm)	B_1	C_1	H_1	L_1	MM	X
63	27	26	11	33.5	M18 x 1.5	28.5
80	32	32.5	13	43.5	M22 x 1.5	35.5
100	41	32.5	16	43.5	M26 x 1.5	35.5

Built-in one-touch fittings: ø63

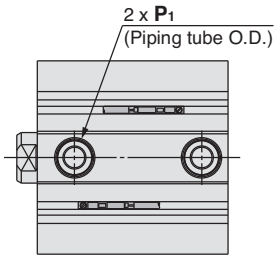

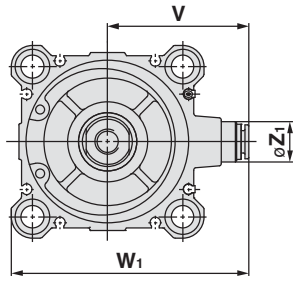

Built-in One-touch Fittings (mm)

Bore size (mm)	Z_1	P_1	V	W_1
63	16	8	56.5	95

Standard For auto switch proper mounting position and its mounting height, refer to pages 193 to 199. (mm)

Bore size (mm)	Stroke range (mm)	Without auto switch		With auto switch		C	D	E	F	H	J	K	L	M	N	O	P	Q	W	Z
		A	B	A	B															
63	10 to 50	44	36	54	46	15	20	77	10.5	M10 x 1.5	7	17	8	60	9	14 depth 10.5	1/4	15	84	19
	75, 100	54	46																	
80	10 to 50	53.5	43.5	63.5	53.5	21	25	98	12.5	M16 x 2.0	6	22	10	77	11	17.5 depth 13.5	3/8	16	104	25
	75, 100	63.5	53.5																	
100	10 to 50	65	53	75	63	27	30	117	13	M20 x 2.5	6.5	27	12	94	11	17.5 depth 13.5	3/8	23	123.5	25
	75, 100	75	63																	

Note 2) The external dimensions with rubber bumper are same as those of the standard, as shown above.
∗ For details about the rod end nut and accessory brackets, refer to page 23.
Note 3) For calculation on the longitudinal dimension of intermediate strokes, refer to page 3.

Foot: CQ2L/CDQ2L

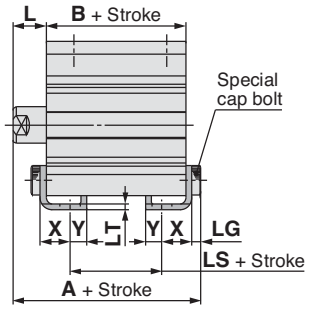

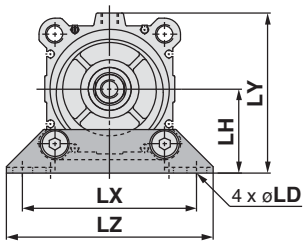

Foot

(mm)

Bore size (mm)	Stroke range (mm)	Without auto switch A	B	LS	With auto switch A	B	LS	L	L_1	LD	LG	LH	LT
63	10 to 50	62.2	36	10	72.2	46	20	18	43.5	11	5	46	3.2
	75, 100	72.2	46	20									
80	10 to 50	75	43.5	13.5	85	53.5	23.5	20	53.5	13	7	59	4.5
	75, 100	85	53.5	23.5									
100	10 to 50	88	53	19	98	63	29	22	53.5	13	7	71	6
	75, 100	98	63	29									

Bore size (mm)	Stroke range (mm)	LX	LY	LZ	X	Y
63	10 to 50	95	91.5	113	16.2	9
	75, 100					
80	10 to 50	118	114	140	19.5	11
	75, 100					
100	10 to 50	137	136	162	23	12.5
	75, 100					

Foot bracket material: Carbon steel
Surface treatment: Nickel plated

Rod end male thread

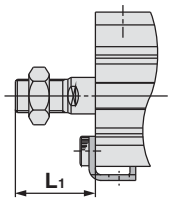

Compact foot: CQ2LC/CDQ2LC

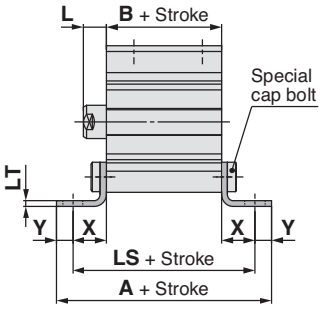

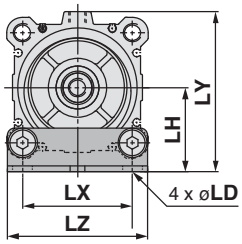

Compact Foot

(mm)

Bore size (mm)	Stroke range (mm)	Without auto switch A	B	LS	With auto switch A	B	LS	L	L_1	LD	LH	LT	LX
63	10 to 50	90.4	36	72.4	100.4	46	82.4	18	43.5	11	46	3.2	60
	75, 100	100.4	46	82.4									
80	10 to 50	110.5	43.5	88.5	120.5	53.5	98.5	20	53.5	13	59	4.5	77
	75, 100	120.5	53.5	98.5									
100	10 to 50	126	53	101	136	63	111	22	53.5	13	71	6	94
	75, 100	136	63	111									

Bore size (mm)	Stroke range (mm)	LY	LZ	X	Y
63	10 to 50	91.5	77	18.2	9
	75, 100				
80	10 to 50	114	98	22.5	11
	75, 100				
100	10 to 50	136	117	24	12.5
	75, 100				

Compact foot bracket material: Carbon steel
Surface treatment: Zinc chromated

∗ For details about the rod end nut and accessory brackets, refer to page 23.

Rod end male thread

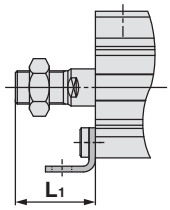

Rod flange: CQ2F/CDQ2F

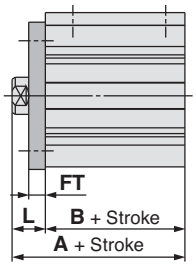

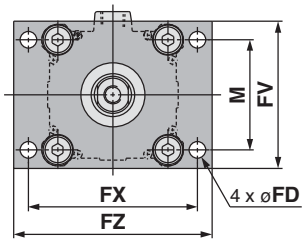

Rod end male thread

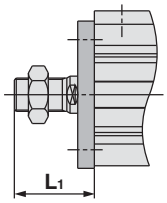

Double clevis: CQ2D/CDQ2D

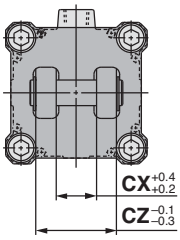

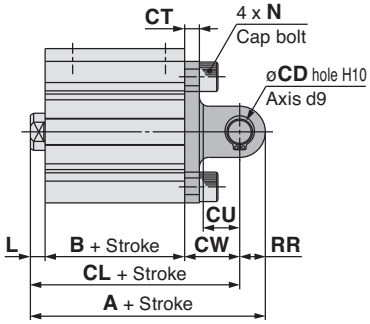

Rod end male thread

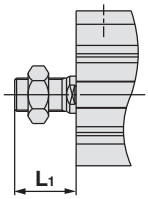

Foot

(mm)

Bore size (mm)	Stroke range (mm)	Without auto switch A	B	LS	With auto switch A	B	LS	L	L1	LD	LG	LH	LT
63	10 to 50	62.2	36	10	72.2	46	20	18	43.5	11	5	46	3.2
	75, 100	72.2	46	20									
80	10 to 50	75	43.5	13.5	85	53.5	23.5	20	53.5	13	7	59	4.5
	75, 100	85	53.5	23.5									
100	10 to 50	88	53	19	98	63	29	22	53.5	13	7	71	6
	75, 100	98	63	29									

Bore size (mm)	Stroke range (mm)	LX	LY	LZ	X	Y
63	10 to 50 / 75, 100	95	91.5	113	16.2	9
80	10 to 50 / 75, 100	118	114	140	19.5	11
100	10 to 50 / 75, 100	137	136	162	23	12.5

Foot bracket material: Carbon steel
Surface treatment: Nickel plated

Rod Flange

(mm)

Bore size (mm)	Stroke range (mm)	Without auto switch A	B	With auto switch A	B	FD	FT	FV	FX	FZ	L	L1	M
63	10 to 50	54	36	64	46	9	9	80	92	108	18	43.5	60
	75, 100	64	46										
80	10 to 50	63.5	43.5	73.5	53.5	11	11	99	116	134	20	53.5	77
	75, 100	73.5	53.5										
100	10 to 50	75	53	85	63	11	11	117	136	154	22	53.5	94
	75, 100	85	63										

Flange bracket material: Carbon steel
Surface treatment: Nickel plated

Head Flange

(mm)

Bore size (mm)	Stroke range (mm)	Without auto switch A	With auto switch A	L	L1
63	10 to 50	53	63	8	33.5
	75, 100	63			
80	10 to 50	64.5	74.5	10	43.5
	75, 100	74.5			
100	10 to 50	76	86	12	43.5
	75, 100	86			

∗ The dimensions except A, L and L1 are the same as those of the rod flange.

Flange bracket material: Carbon steel Surface treatment: Nickel plated

Double Clevis

(mm)

Bore size (mm)	Stroke range (mm)	Without auto switch A	B	CL	With auto switch A	B	CL	CD	CT	CU	CW	CX
63	10 to 50	88	36	74	98	46	84	14	8	20	30	22
	75, 100	98	46	84								
80	10 to 50	109.5	43.5	91.5	119.5	53.5	101.5	18	10	27	38	28
	75, 100	119.5	53.5	101.5								
100	10 to 50	132	53	110	142	63	120	22	13	31	45	32
	75, 100	142	63	120								

Bore size (mm)	Stroke range (mm)	CZ	L	L1	N	RR
63	10 to 50 / 75, 100	44	8	33.5	M10 x 1.5	14
80	10 to 50 / 75, 100	56	10	43.5	M12 x 1.75	18
100	10 to 50 / 75, 100	64	12	43.5	M12 x 1.75	22

Double clevis bracket material: Cast iron
Surface treatment: Painted

∗ For details about the rod end nut and accessory brackets, refer to page 23.
∗ Double clevis pin and retaining rings are included.

Accessory Brackets

Single Knuckle Joint

I-G012, I-Z015A
I-G02, I-G03

I-G04, I-G05
I-G08, I-G10

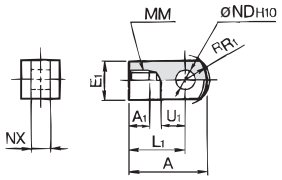

Material: Carbon steel
Surface treatment: Nickel plated

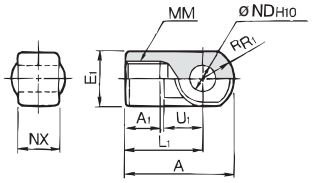

Material: Cast iron
Surface treatment: Nickel plated

(mm)

Part no.	Applicable bore size (mm)	A	A_1	E_1	L_1	MM	$^RR_1$	U_1	ND_{H10}	NX
I-G012	**12**	21.5	6	□10	16	M5 x 0.8	6.3	7	$5^{+0.048}_{0}$	$5^{-0.2}_{-0.4}$
I-Z015A	**16**	32	8	□12	25	M6 x 1	8.1	14	$5^{+0.048}_{0}$	$6.4^{-0.1}_{-0.3}$
I-G02	**20**	34	8.5	□16	25	M8 x 1.25	10.3	11.5	$8^{+0.058}_{0}$	$8^{-0.2}_{-0.4}$
I-G03	**25**	41	10.5	□20	30	M10 x 1.25	12.8	14	$10^{+0.058}_{0}$	$10^{-0.2}_{-0.4}$
I-G04	**32, 40**	42	14	ø22	30	M14 x 1.5	12	14	$10^{+0.058}_{0}$	$18^{-0.3}_{-0.5}$
I-G05	**50, 63**	56	18	ø28	40	M18 x 1.5	16	20	$14^{+0.070}_{0}$	$22^{-0.3}_{-0.5}$
I-G08	**80**	71	21	ø38	50	M22 x 1.5	21	27	$18^{+0.070}_{0}$	$28^{-0.3}_{-0.5}$
I-G10	**100**	79	21	ø44	55	M26 x 1.5	24	31	$22^{+0.084}_{0}$	$32^{-0.3}_{-0.5}$

Double Knuckle Joint

Y-G012, Y-Z015A
Y-G02, Y-G03

Y-G04, Y-G05
Y-G08, Y-G10

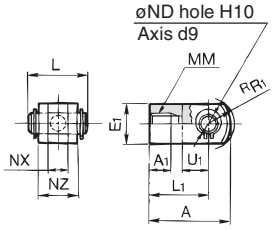

Material: Carbon steel
Surface treatment: Nickel plated

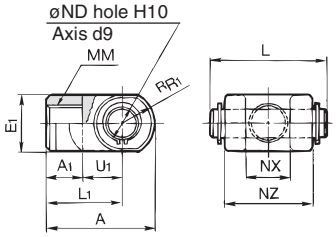

Material: Cast iron
Surface treatment: Nickel plated

(mm)

Part no.	Applicable bore size (mm)	A	A_1	E_1	L_1	MM	$^RR_1$	U_1	ND_{H10}	NX	NZ	L	Applicable pin part no.
Y-G012	**12**	21.5	6	□10	16	M5 x 0.8	6.3	7	$5^{+0.048}_{0}$	$5^{+0.4}_{+0.2}$	10	14.6	IY-G012
Y-Z015A	**16**	28	11	□12	21	M6 x 1	8.1	10	$5^{+0.048}_{0}$	$6.5^{+0.2}_{+0}$	12	16.6	IY-J015
Y-G02	**20**	34	8.5	□16	25	M8 x 1.25	10.3	11.5	$8^{+0.058}_{0}$	$8^{+0.4}_{+0.2}$	16	21	IY-G02
Y-G03	**25**	41	10.5	□20	30	M10 x 1.25	12.8	14	$10^{+0.058}_{0}$	$10^{+0.4}_{+0.2}$	20	25.6	IY-G03
Y-G04	**32, 40**	42	16	ø22	30	M14 x 1.5	12	14	$10^{+0.058}_{0}$	$18^{+0.5}_{+0.3}$	36	41.6	IY-G04
Y-G05	**50, 63**	56	20	ø28	40	M18 x 1.5	16	20	$14^{+0.070}_{0}$	$22^{+0.5}_{+0.3}$	44	50.6	IY-G05
Y-G08	**80**	71	23	ø38	50	M22 x 1.5	21	27	$18^{+0.070}_{0}$	$28^{+0.5}_{+0.3}$	56	64	IY-G08
Y-G10	**100**	79	24	ø44	55	M26 x 1.5	24	31	$22^{+0.084}_{0}$	$32^{+0.5}_{+0.3}$	64	72	IY-G10

∗ Knuckle pin and retaining rings are included.

Knuckle Pin (Common with double clevis pin)

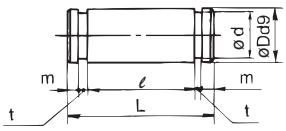

Material: Carbon steel

(mm)

Part no.	Applicable bore size (mm)	Dd9	L	d	ℓ	m	t	Applicable retaining ring
IY-G012	**12**	$5^{-0.030}_{-0.060}$	14.6	4.8	10.2	1.5	0.7	Type C5 for axis
IY-J015	**16**	$5^{-0.030}_{-0.060}$	16.6	4.8	12.2	1.5	0.7	Type C5 for axis
IY-G02	**20**	$8^{-0.040}_{-0.076}$	21	7.6	16.2	1.5	0.9	Type C8 for axis
IY-G03	**25**	$10^{-0.040}_{-0.076}$	25.6	9.6	20.2	1.55	1.15	Type C10 for axis
IY-G04	**32, 40**	$10^{-0.040}_{-0.076}$	41.6	9.6	36.2	1.55	1.15	Type C10 for axis
IY-G05	**50, 63**	$14^{-0.050}_{-0.093}$	50.6	13.4	44.2	2.05	1.15	Type C14 for axis
IY-G08	**80**	$18^{-0.050}_{-0.093}$	64	17	56.2	2.55	1.35	Type C18 for axis
IY-G10	**100**	$22^{-0.065}_{-0.117}$	72	21	64.2	2.55	1.35	Type C22 for axis

∗ Type C retaining rings for axis are included.

Rod End Nut

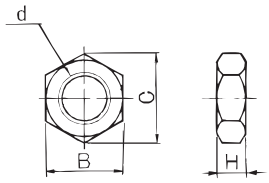

Material: Carbon steel
Surface treatment: Nickel plated

(mm)

Part no.	Applicable bore size (mm)	d	H	B	C
NTJ-015A	**12**	M5 x 0.8	4	8	9.2
NT-015A	**16**	M6 x 1	5	10	11.5
NT-02	**20**	M8 x 1.25	5	13	15.0
NT-03	**25**	M10 x 1.25	6	17	19.6
NT-04	**32, 40**	M14 x 1.5	8	22	25.4
NT-05	**50, 63**	M18 x 1.5	11	27	31.2
NT-08	**80**	M22 x 1.5	13	32	37.0
NT-10	**100**	M26 x 1.5	16	41	47.3

Simple Joint (CQ2): ø32 to ø100

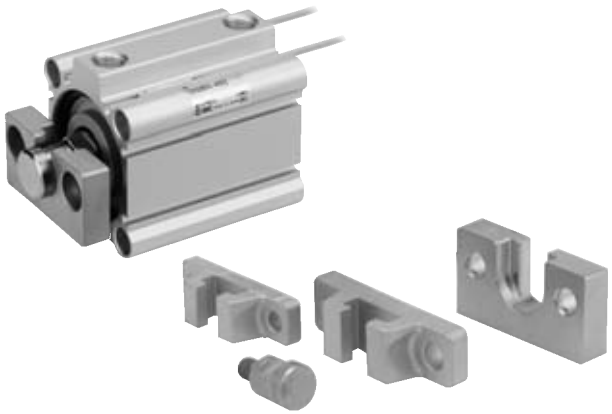

Joint/Mounting Bracket (Type A/B)/Part No.

YA – 03

Applicable air cylinder bore size

03	For ø32, ø40
05	For ø50, ø63
08	For ø80
10	For ø100

Mounting bracket

YA	Type A mounting bracket
YB	Type B mounting bracket
YU	Joint

Allowable Eccentricity

(mm)

Bore size (mm)	32	40	50	63	80	100
Eccentricity tolerance	±1				±1.5	±2
Backlash	0.5					

<Ordering>
- Joints are not included with type A or B mounting brackets. Order them separately.

(Example)
Bore size ø40 Part no.
- Type A mounting bracket YA-03
- Joint YU-03

Joint/Mounting Bracket (Type A/B)/Part No.

Bore size (mm)	Joint	Applicable mounting bracket	
		Type A mounting bracket	Type B mounting bracket
32, 40	YU-03	YA-03	YB-03
50, 63	YU-05	YA-05	YB-05
80	YU-08	YA-08	YB-08
100	YU-10	YA-10	YB-10

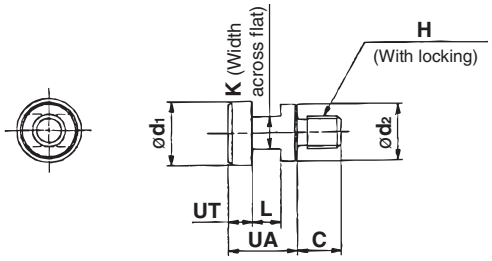

Material: Chromium molybdenum steel (Nickel plated)

(mm)

Part no.	Applicable bore size (mm)	UA	C	d1	d2	H	K	L	UT	Weight (g)
YU-03	32, 40	17	11	15.8	14	M8 x 1.25	8	7	6	25
YU-05	50, 63	17	13	19.8	18	M10 x 1.5	10	7	6	40
YU-08	80	22	20	24.8	23	M16 x 2	13	9	8	90
YU-10	100	26	26	29.8	28	M20 x 2.5	14	11	10	160

Type A Mounting Bracket

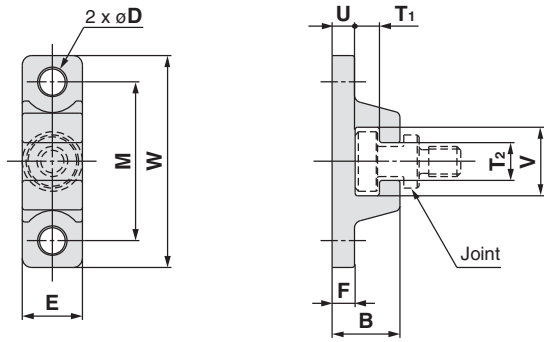

Material: Chromium molybdenum steel (Nickel plated)

(mm)

Part no.	Bore size (mm)	B	D	E	F	M	T1	T2
YA-03	32, 40	18	6.8	16	6	42	6.5	10
YA-05	50, 63	20	9	20	8	50	6.5	12
YA-08	80	26	11	25	10	62	8.5	16
YA-10	100	31	14	30	12	76	10.5	18

Part no.	Bore size (mm)	U	V	W	Weight (g)
YA-03	32, 40	6	18	56	55
YA-05	50, 63	8	22	67	100
YA-08	80	10	28	83	195
YA-10	100	12	36	100	340

Type B Mounting Bracket

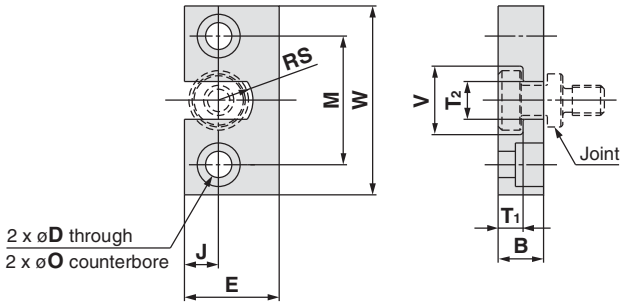

Material: Stainless steel

(mm)

Part no.	Bore size (mm)	B	D	E	J	M	øO
YB-03	32, 40	12	7	25	9	34	11.5 depth 7.5
YB-05	50, 63	12	9	32	11	42	14.5 depth 8.5
YB-08	80	16	11	38	13	52	18 depth 12
YB-10	100	19	14	50	17	62	21 depth 14

Part no.	Bore size (mm)	T1	T2	V	W	RS	Weight (g)
YB-03	32, 40	6.5	10	18	50	9	80
YB-05	50, 63	6.5	12	22	60	11	120
YB-08	80	8.5	16	28	75	14	230
YB-10	100	10.5	18	36	90	18	455

Bore size ø12 to ø25

Without auto switch

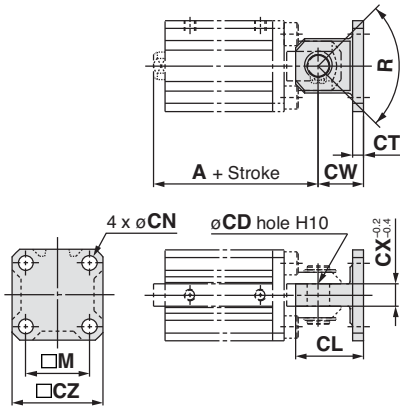

With auto switch

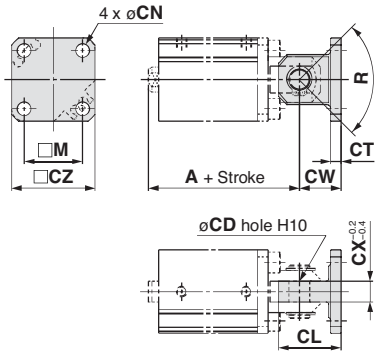

(mm)

Bracket part no.	Bore size	Stroke range	A		CW	CT	CL	CX	CD	M	CZ	R	CN	Hexagon socket head cap screw for mounting pivot bracket (Accessory)
			Without auto switch	With auto switch										
CQ-C012	12	5 to 30	34.5	45.5	14	4	19	5	5	15.5	25	100°	4.5	M4 x 10L
CQ-C016	16	5 to 30	37	49	15	4	21	6.5	5	20	28	100°	4.5	M4 x 10L
CQ-C020	20	5 to 50	42	54	18	5	27	8	8	25.5	35	80°	6.6	M6 x 12L
CQ-C025	25	5 to 50	47.5	57.5	20	5	30	10	10	28	40	90°	6.6	M6 x 12L

∗ The double clevis pin and retaining ring are not included.

Double clevis pivot bracket material: Carbon steel
Surface treatment: Nickel plated

Bore size ø32 to ø100

Without auto switch, With auto switch

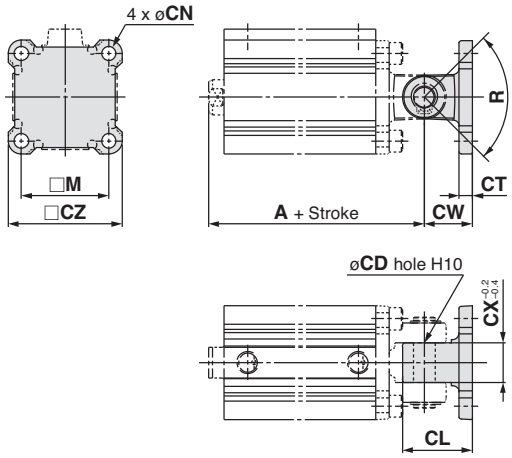

(mm)

Bracket part no.	Bore size	Stroke range	A		CW	CT	CL	CX	CD	M	CZ	R	CN	Hexagon socket head cap screw for mounting pivot bracket (Accessory)
			Without auto switch	With auto switch										
CQ-C032	32	5 to 50	50	60	20	5	30	18	10	34	45	80°	6.6	M6 x 12L
		75, 100	60											
CQ-C040	40	5 to 50	58.5	68.5	22	6	32	18	10	40	52	80°	6.6	M6 x 14L
		75, 100	68.5											
CQ-C050	50	10 to 50	66.5	76.5	28	7	42	22	14	50	64	80°	9	M8 x 16L
		75, 100	76.5											
CQ-C063	63	10 to 50	74	84	30	8	44	22	14	60	77	60°	11	M10 x 20L
		75, 100	84											
CQ-C080	80	10 to 50	91.5	101.5	38	10	56	28	18	77	98	70°	13.5	M12 x 25L
		75, 100	101.5											
CQ-C100	100	10 to 50	110	120	45	13	67	32	22	94	117	70°	13.5	M12 x 30L
		75, 100	120											

∗ The double clevis pin and retaining ring are not included.

Double clevis pivot bracket material: Cast iron
Surface treatment: Painted

Compact Cylinder: Standard
Double Acting, Double Rod
Series CQ2W

ø12, ø16, ø20, ø25, ø32, ø40, ø50, ø63, ø80, ø100

How to Order

Without auto switch ø12 to ø25

CQ2W B □ 20 □ – 30 D □ —— □

Without auto switch ø32 to ø100

CQ2W B □ 32 □ – 30 D □ Z – □

With auto switch

CDQ2W B □ 32 □ – 30 D □ Z – M9BW □ – □

With auto switch
(Built-in magnet)

Mounting

B	Through-hole (Standard)	L	Foot
A	Both ends tapped	LC	Compact foot
		F	Flange

∗ Mounting brackets are shipped together, (but not assembled).
∗ Cylinder mounting bolts are not included. Order them separately referring to "Mounting Bolt for C(D)Q2WB" on pages 29 and 32.

Type

—	Pneumatic
H	Air-hydro Note 1)

Note 1) Bore sizes available for air-hydro type are ø20 to ø100.

Bore size

12	12 mm
16	16 mm
20	20 mm
25	25 mm
32	32 mm
40	40 mm
50	50 mm
63	63 mm
80	80 mm
100	100 mm

Port thread type

—	M thread	ø12 to ø25
	Rc	ø32 to ø100
TN	NPT	
TF	G	
F	Built-in one-touch fittings Note 2)	

Note 2) Bore sizes available with one-touch fittings are ø32 to ø63. Besides, it is not possible to use for air-hydro type.
Note 3) "TF" is not available for the air-hydro type.
∗ For cylinders without auto switch, M threads are compatible only for ø32-5 mm stroke.

Auto switch

—	Without auto switch

∗ Refer to the below table for applicable auto switches.

Auto switch mounting groove

Z	ø12 to ø25	2 surfaces
	ø32 to ø100	4 surfaces

Number of auto switches

—	2 pcs.
S	1 pc.
n	"n" pcs.

Made to Order
Refer to the next page for details.

Body option

—	Standard (Rod end female thread)
C	With rubber bumper Note 4)
M	Rod end male thread

∗ Combination of body options ("CM") is available.
Note 4) Air-hydro type with rubber bumper is not available.

Action

D	Double acting

Cylinder stroke (mm)
Refer to the next page for standard strokes.

Built-in Magnet Cylinder Model

If a built-in magnet cylinder without an auto switch is required, there is no need to enter the symbol for the auto switch.
(Example) CDQ2WL32-25DZ

Refer to pages 1263 to 1371 in Best Pneumatics No. 2 for further information on auto switches.

Applicable Auto Switches/Refer to the individual catalogue (ES20-201) for the D-P3DW type.

Type	Special function	Electrical entry	Indicator light	Wiring (Output)	Load voltage DC		Load voltage AC	Auto switch model Perpendicular	Auto switch model In-line	Lead wire length (m) 0.5 (—)	1 (M)	3 (L)	5 (Z)	None (N)	Pre-wired connector	Applicable load	
Solid state auto switch	——	Grommet	Yes	3-wire (NPN)	24 V	5 V, 12 V	—	M9NV	M9N	●	●	●	○	—	○	IC circuit	Relay, PLC
				3-wire (PNP)				M9PV	M9P	●	●	●	○	—	○		
				2-wire		12 V		M9BV	M9B	●	●	●	○	—	○	—	
	Diagnostic indication (2-colour indication)			3-wire (NPN)		5 V, 12 V		M9NWV	M9NW	●	●	●	○	—	○	IC circuit	
				3-wire (PNP)				M9PWV	M9PW	●	●	●	○	—	○		
				2-wire		12 V		M9BWV	M9BW	●	●	●	○	—	○	—	
	Water resistant (2-colour indication)			3-wire (NPN)		5 V, 12 V		M9NAV**	M9NA**	○	○	●	○	—	○	IC circuit	
				3-wire (PNP)				M9PAV**	M9PA**	○	○	●	○	—	○		
				2-wire		12 V		M9BAV**	M9BA**	○	○	●	○	—	○	—	
	Magnetic field resistant (2-colour indication)			2-wire (Non-polar)		—		—	P3DW	●	—	●	●	—	○		
Reed auto switch	——	Grommet	Yes	3-wire (NPN equivalent)	—	5 V	—	A96V	A96	●	—	●	—	—	—	IC circuit	—
			No	2-wire	24 V	12 V	100 V	A93V	A93	●	—	●	—	—	—	—	Relay, PLC
						5 V,12 V	100 V or less	A90V	A90	●	—	●	—	—	—	IC circuit	

∗∗ Water resistant type auto switches can be mounted on the above models, but in such case SMC cannot guarantee water resistance. Consult with SMC regarding water resistant types with the above model numbers.

∗ Lead wire length symbols: 0.5 m ····· — (Example) M9NW
1 m ····· M (Example) M9NWM
3 m ····· L (Example) M9NWL
5 m ····· Z (Example) M9NWZ

∗ Solid state auto switches marked with "○" are produced upon receipt of order.
∗ The D-P3DW□ type is available from ø32 to ø100 only.

∗ There are other applicable auto switches other than the listed above. For details, refer to page 199.
∗ For details about auto switches with pre-wired connector, refer to pages 1328 and 1329 in Best Pneumatics No. 2.